NIOB FLUID

02

PRODUCER OF STAINLESS PIPPING SYSTEMS

HERSTELLER VON EDELSTAHLARMATUREN

# PIPE UNIONS

# ROHRVERBINDUNGEN

04/2026

www.niobfluid.cz

# Catalogues NIOB FLUID
## Kataloge NIOB FLUID

02 PIPE UNIONS
ROHRVERBINDUNGEN

03 FITTINGS
ROHRFORMSTÜCKE

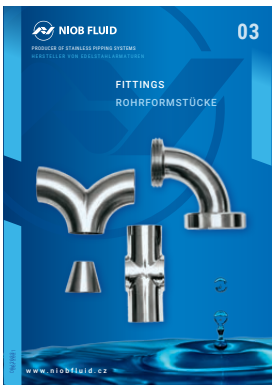


04 VALVES AND COCKS
VENTILE UND HÄHNE

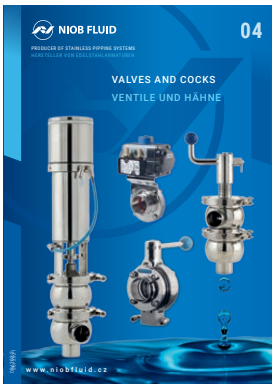


05 SPECIAL FITTINGS AND PARTS
SPEZIALARMATUREN UND TEILE

06 DOORS AND MANWAYS
MANNLOCHTÜREN UND KLAPPTÜREN

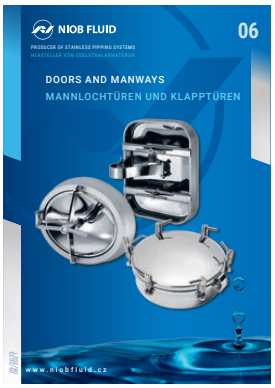


07 ACCESSORIES
ZUBEHÖR

08 DOUBLE-WALLED PIPING SYSTEMS
DOPPELWANDIGE ROHRSYSTEME

09 ASEPTIC PROGRAM
ASEPTISCHES PROGRAMM

Current versions of catalogs at www.niobfluid.cz • Aktuelle Katalogversionen unter www.niobfluid.cz

The company NIOB FLUID s. r. o. is a manufacturer focused on the production of fasteners, shut-off and control valves of stainless steels. These valves are especially designed for the transport of liquids in the food, chemical and the pharmaceutical industry. It is simultaneously also the supplier of pipe fittings and other parts needed for piping systems and components for tanks such as the lid, manwaydoor, level indicator and other components.

Die Gesellschaft NIOB FLUID s.r.o. ist ein Hersteller, der auf die Produktion von Verbindungs-, Absperr- und Regulierungsarmaturen aus Edelstahl orientiert ist. Diese Armaturen sind vor allem für den Transport von Flüssigkeiten in der Lebensmittel- und Chemieindustrie und in der Pharmazie bestimmt. Die Gesellschaft ist gleichzeitig auch Lieferant von Rohrverbindungsstücken und weiteren Teilen, die für die Rohrleitungen erforderlich sind, und von Behälterteilen wie Hauben, Luken, Standgläser und weitere Komponenten.

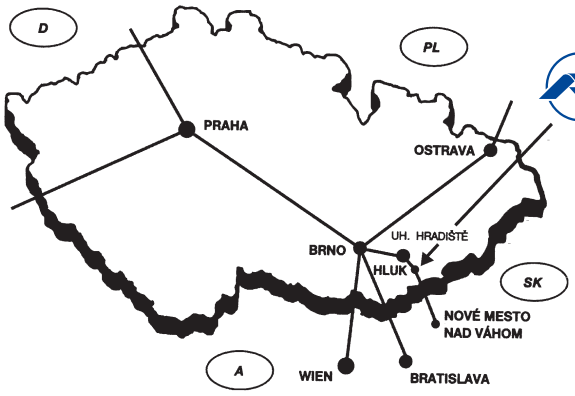


NIOB FLUID

NIOB FLUID s. r. o.
Ostrožská 1003, 687 25 Hluk, Czech Republic
Phone: +420 572 419 822 – 8, Fax: +420 572 419 868
**E-mail: marketing@niobfluid.cz, www.niobfluid.cz**

# Pipe unions
## Rohrverbindungen

### Expanding male
### Einwalzgewindestutzen

**20010** — **DIN 11 851**

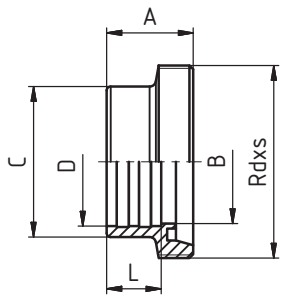


**Dimensions** • Baumaße

| DN | A | B | C | D | E | F | R | L | thread DIN 405 Rd x s | kg |
|---|---|---|---|---|---|---|---|---|---|---|
| **25** | 29 | 26 | 35 | 28,2 | | | | 15 | 52x1/6" | 0,16 |
| **32** | 32 | 32 | 41 | 34,2 | | | | 18 | 58x1/6" | 0,19 |
| **40** | 33 | 38 | 48 | 40,3 | | | | 20 | 65x1/6" | 0,24 |
| **50** | 35 | 50 | 61 | 52,3 | | | | 22 | 78x1/6" | 0,34 |
| **65** | 40 | 66 | 79 | 70,4 | | | | 25 | 95x1/6" | 0,51 |
| **80** | 45 | 81 | 93 | 85,4 | | | | 28 | 110x1/4" | 0,72 |

### Expanding liner
### Einwalzkegelstutzen

**20020** — **DIN 11 851**

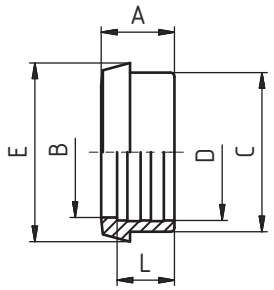


**Dimensions** • Baumaße

| DN | A | B | C | D | E | F | R | L | thread DIN 405 Rd x s | kg |
|---|---|---|---|---|---|---|---|---|---|---|
| **25** | 22 | 26 | 35 | 28,2 | 44 | | | 15 | | 0,09 |
| **32** | 25 | 32 | 41 | 34,2 | 50 | | | 18 | | 0,12 |
| **40** | 26 | 38 | 48 | 40,3 | 56 | | | 20 | | 0,15 |
| **50** | 28 | 50 | 61 | 52,3 | 68,5 | | | 22 | | 0,22 |
| **65** | 32 | 66 | 79 | 70,4 | 86 | | | 25 | | 0,32 |
| **80** | 37 | 81 | 93 | 85,4 | 100 | | | 28 | | 0,40 |

### Nut
### Nutmutter

**20030** — **DIN 11 851**

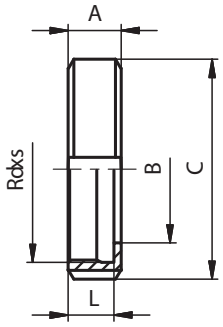


**Dimensions** • Baumaße

| DN | A | B | C | D | E | F | R | L | thread DIN 405 Rd x s | kg |
|---|---|---|---|---|---|---|---|---|---|---|
| **10** | 18 | 19 | 38 | | | | | 15 | 28x1/8" | 0,07 |
| **15** | 18 | 25 | 44 | | | | | 15 | 34x1/8" | 0,08 |
| **20** | 20 | 31 | 54 | | | | | 17 | 44x1/6" | 0,14 |
| **25** | 21 | 36 | 63 | | | | | 18 | 52x1/6" | 0,18 |
| **32** | 21 | 42 | 70 | | | | | 18 | 58x1/6" | 0,22 |
| **40** | 21 | 49 | 78 | | | | | 18 | 65x1/6" | 0,25 |
| **50** | 22 | 62 | 92 | | | | | 19 | 78x1/6" | 0,33 |
| **65** | 25 | 80 | 112 | | | | | 21 | 95x1/6" | 0,55 |
| **80** | 29 | 94 | 127 | | | | | 25 | 110x1/4" | 0,80 |
| **100** | 31 | 115 | 148 | | | | | 26 | 130x1/4" | 1,08 |
| **125** | 35 | 138 | 178 | | | | | 30 | 160x1/4" | 1,45 |
| **150** | 40 | 164 | 210 | | | | | 34 | 190x1/4" | 1,88 |

### Gasket
### Dichtung

**20040** **20041** — **DIN 11 851**

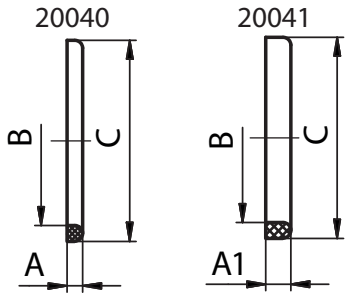


**Dimensions** • Baumaße

| DN | A | A1 | B | C | E | F | R | L | thread DIN 405 Rd x s | kg |
|---|---|---|---|---|---|---|---|---|---|---|
| **10** | 4,5 | - | 12 | 20 | | | | | | 0,0012 |
| **15** | 4,5 | - | 18 | 26 | | | | | | 0,0016 |
| **20** | 4,5 | - | 23 | 33 | | | | | | 0,0026 |
| **25** | 5 | 8 | 30 | 40 | | | | | | 0,0036 |
| **32** | 5 | 8 | 36 | 46 | | | | | | 0,0040 |
| **40** | 5 | 8 | 42 | 52 | | | | | | 0,0048 |
| **50** | 5 | 8 | 54 | 64 | | | | | | 0,0062 |
| **65** | 5 | 8 | 71 | 81 | | | | | | 0,0070 |
| **75/3"** | 5 | - | 78 | 88 | | | | | | 0,0075 |
| **80** | 5 | 8 | 85 | 95 | | | | | | 0,0080 |
| **100** | 6 | 8 | 104 | 114 | | | | | | 0,0134 |
| **125** | 7 | 8 | 130 | 142 | | | | | | 0,0236 |
| **150** | 7 | 8 | 155 | 167 | | | | | | 0,0276 |

## Expanding union - complete
Einwalzverschraubung - komplett

**20090** DIN 11 851

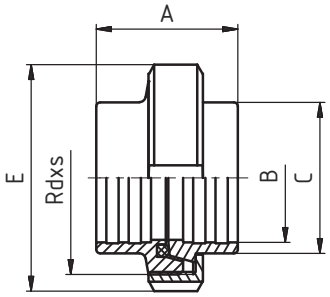


**Dimensions** • Baumaße

| DN | A | B | C | D | E | F | R | L | thread DIN 405 Rd x s | kg |
|---|---|---|---|---|---|---|---|---|---|---|
| 25 | 45 | 28,2 | 35 | | 63 | | | | 52x1/6" | 0,16 |
| 32 | 51 | 34,2 | 41 | | 70 | | | | 58x1/6" | 0,19 |
| 40 | 53 | 40,3 | 48 | | 78 | | | | 65x1/6" | 0,24 |
| 50 | 57 | 52,3 | 61 | | 92 | | | | 78x1/6" | 0,34 |
| 65 | 65 | 70,4 | 79 | | 112 | | | | 95x1/6" | 0,51 |
| 80 | 75 | 85,4 | 93 | | 127 | | | | 110x1/4" | 0,72 |

## Welding male
Anschweißgewindestutzen

**20100** DIN 11 851

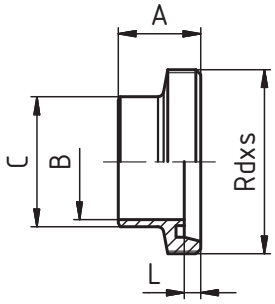


**Dimensions** • Baumaße

| DN | A | B | C | D | E | F | R | L | thread DIN 405 Rd x s | kg |
|---|---|---|---|---|---|---|---|---|---|---|
| 10 | 21 | 10 | 15 | | | | | 4 | 28 x 1/8" | 0,044 |
| 15 | 21 | 16 | 21 | | | | | 4 | 34 x 1/8" | 0,046 |
| 20 | 24 | 20 | 25 | | | | | 6 | 44 x 1/6" | 0,084 |
| 25 | 29 | 26 | 31 | | | | | 7 | 52 x 1/6" | 0,104 |
| 32 | 32 | 32 | 37 | | | | | 7 | 58 x 1/6" | 0,112 |
| 40 | 33 | 38 | 43 | | | | | 7 | 65 x 1/6" | 0,164 |
| 50 | 35 | 50 | 55 | | | | | 7 | 78 x 1/6" | 0,296 |
| 65 | 40 | 66 | 72 | | | | | 8 | 95 x 1/6" | 0,280 |
| 80 | 45 | 81 | 87 | | | | | 8 | 110 x 1/4" | 0,540 |
| 100 | 54 | 100 | 106 | | | | | 10 | 130 x 1/4" | 0,780 |
| 125 | 46 | 125 | 132 | | | | | 12 | 160 x 1/4" | 1,140 |
| 150 | 50 | 150 | 157 | | | | | 13 | 190 x 1/4" | 1,800 |

## Welding liner
Anschweißkegelstutzen

**20110** DIN 11 851

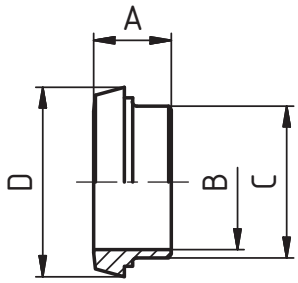


**Dimensions** • Baumaße

| DN | A | B | C | D | E | F | R | L | thread DIN 405 Rd x s | kg |
|---|---|---|---|---|---|---|---|---|---|---|
| 10 | 17 | 10 | 15 | 22,5 | | | | | | 0,060 |
| 15 | 17 | 16 | 21 | 28,5 | | | | | | 0,062 |
| 20 | 18 | 20 | 25 | 36,5 | | | | | | 0,100 |
| 25 | 22 | 26 | 31 | 44 | | | | | | 0,120 |
| 32 | 25 | 32 | 37 | 50 | | | | | | 0,160 |
| 40 | 26 | 38 | 43 | 56 | | | | | | 0,165 |
| 50 | 28 | 50 | 55 | 68,5 | | | | | | 0,220 |
| 65 | 32 | 66 | 72 | 86 | | | | | | 0,320 |
| 80 | 37 | 81 | 87 | 100 | | | | | | 0,400 |
| 100 | 44 | 100 | 106 | 121 | | | | | | 0,600 |
| 125 | 34 | 125 | 132 | 150 | | | | | | 0,930 |
| 150 | 37 | 150 | 157 | 176 | | | | | | 1,060 |

## Welding union - complete
Anschweißverschraubung - komplett

**20120** DIN 11 851

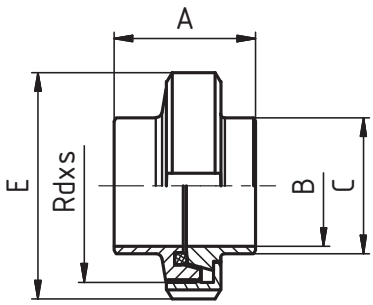


**Dimensions** • Baumaße

| DN | A | B | C | D | E | F | R | L | thread DIN 405 Rd x s | kg |
|---|---|---|---|---|---|---|---|---|---|---|
| 10 | 35 | 10 | 15 | | 38 | | | | 28 x 1/8" | 0,17 |
| 15 | 35 | 16 | 21 | | 44 | | | | 34 x 1/8" | 0,18 |
| 20 | 37 | 20 | 25 | | 54 | | | | 44 x 1/6" | 0,32 |
| 25 | 45 | 26 | 31 | | 63 | | | | 52 x 1/6" | 0,40 |
| 32 | 51 | 32 | 37 | | 70 | | | | 58 x 1/6" | 0,49 |
| 40 | 53 | 38 | 43 | | 78 | | | | 65 x 1/6" | 0,58 |
| 50 | 57 | 50 | 55 | | 92 | | | | 78 x 1/6" | 0,84 |
| 65 | 65 | 66 | 72 | | 112 | | | | 95 x 1/6" | 1,15 |
| 80 | 75 | 81 | 87 | | 127 | | | | 110 x 1/4" | 1,74 |
| 100 | 89 | 100 | 106 | | 148 | | | | 130 x 1/4" | 2,46 |
| 125 | 69 | 125 | 132 | | 178 | | | | 160 x 1/4" | 3,52 |
| 150 | 74 | 150 | 157 | | 210 | | | | 190 x 1/4" | 4,74 |

## Welding male
Anschweißgewindestutzen

**20100 R**
**DIN 11 851**

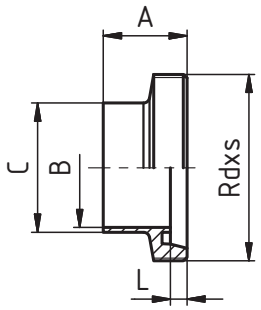


**Dimensions** • Baumaße

| DN | A | B | C | D | E | F | R | L | thread DIN 405 Rd x s | kg |
|---|---|---|---|---|---|---|---|---|---|---|
| **10** | 21 | 10 | 13 | | | | | 4 | 28 x 1/8" | 0,04 |
| **15** | 21 | 16 | 19 | | | | | 4 | 34 x 1/8" | 0,05 |
| **20** | 24 | 20 | 23 | | | | | 6 | 44 x 1/6" | 0,09 |
| **25** | 29 | 26 | 29 | | | | | 7 | 52 x 1/6" | 0,11 |
| **32** | 32 | 32 | 35 | | | | | 7 | 58 x 1/6" | 0,13 |
| **40** | 33 | 38 | 41 | | | | | 7 | 65 x 1/6" | 0,16 |
| **50** | 35 | 50 | 53 | | | | | 7 | 78 x 1/6" | 0,22 |
| **65** | 40 | 66 | 70 | | | | | 8 | 95 x 1/6" | 0,35 |
| **80** | 45 | 81 | 85 | | | | | 8 | 110 x 1/4" | 0,52 |
| **100** | 54 | 100 | 104 | | | | | 10 | 130 x 1/4" | 0,67 |
| **125** | 46 | 125 | 129 | | | | | 12 | 160 x 1/4" | 0,99 |
| **150** | 50 | 150 | 154 | | | | | 13 | 190 x 1/4" | 1,71 |

## Welding liner
Anschweißkegelstutzen

**20110 R**
**DIN 11 851**

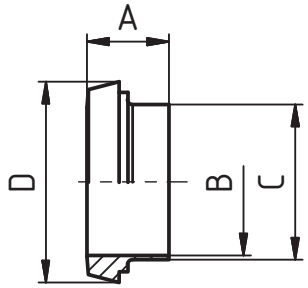


**Dimensions** • Baumaße

| DN | A | B | C | D | E | F | R | L | thread DIN 405 Rd x s | kg |
|---|---|---|---|---|---|---|---|---|---|---|
| **10** | 17 | 10 | 13 | 22,5 | | | | | | 0,02 |
| **15** | 17 | 16 | 19 | 28,5 | | | | | | 0,03 |
| **20** | 18 | 20 | 23 | 36,5 | | | | | | 0,06 |
| **25** | 22 | 26 | 29 | 44 | | | | | | 0,08 |
| **32** | 25 | 32 | 35 | 50 | | | | | | 0,10 |
| **40** | 26 | 38 | 41 | 56 | | | | | | 0,12 |
| **50** | 28 | 50 | 53 | 68,5 | | | | | | 0,17 |
| **65** | 32 | 66 | 70 | 86 | | | | | | 0,29 |
| **80** | 37 | 81 | 85 | 100 | | | | | | 0,35 |
| **100** | 44 | 100 | 104 | 121 | | | | | | 0,57 |
| **125** | 34 | 125 | 129 | 150 | | | | | | 0,77 |
| **150** | 37 | 150 | 154 | 176 | | | | | | 1,01 |

## Welding union - complete
Anschweißverschraubung - komplett

**20120 R**
**DIN 11 851**

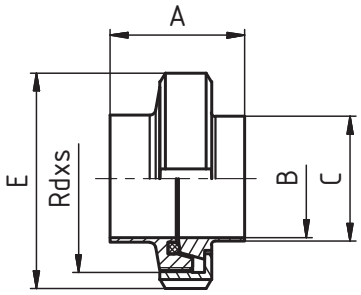


**Dimensions** • Baumaße

| DN | A | B | C | D | E | F | R | L | thread DIN 405 Rd x s | kg |
|---|---|---|---|---|---|---|---|---|---|---|
| **10** | 35 | 10 | 13 | | 38 | | | | 28 x 1/8" | 0,13 |
| **15** | 35 | 16 | 19 | | 44 | | | | 34 x 1/4" | 0,16 |
| **20** | 37 | 20 | 23 | | 54 | | | | 44 x 1/6" | 0,28 |
| **25** | 45 | 26 | 29 | | 63 | | | | 52 x 1/6" | 0,37 |
| **32** | 51 | 32 | 35 | | 70 | | | | 58 x 1/6" | 0,45 |
| **40** | 53 | 38 | 41 | | 78 | | | | 65 x 1/6" | 0,53 |
| **50** | 57 | 50 | 53 | | 92 | | | | 78 x 1/6" | 0,67 |
| **65** | 65 | 66 | 70 | | 112 | | | | 95 x 1/6" | 1,19 |
| **80** | 75 | 81 | 85 | | 127 | | | | 110 x 1/4" | 1,67 |
| **100** | 89 | 100 | 104 | | 148 | | | | 130 x 1/4" | 2,32 |
| **125** | 69 | 125 | 129 | | 178 | | | | 160 x 1/4" | 3,21 |
| **150** | 74 | 150 | 154 | | 210 | | | | 190 x 1/4" | 4,60 |

## Welding male
Anschweißgewindestutzen

**20100 T** **Dimensions** • Baumaße

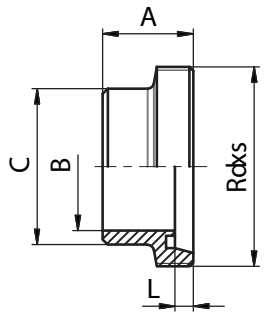


| DN | A | B | C | D | E | F | R | L | thread DIN 405 Rd x s | kg |
|---|---|---|---|---|---|---|---|---|---|---|
| **10** | 21 | 10 | 18 | | | | | 4 | 28x1/8" | 0,05 |
| **15** | 21 | 16 | 24 | | | | | 4 | 34x1/8" | 0,07 |
| **20** | 24 | 20 | 30 | | | | | 6 | 44x1/6" | 0,13 |
| **25** | 29 | 26 | 35 | | | | | 7 | 52x1/6" | 0,17 |
| **32** | 32 | 32 | 41 | | | | | 7 | 58x1/6" | 0,21 |
| **40** | 33 | 38 | 48 | | | | | 7 | 65x1/6" | 0,27 |
| **50** | 35 | 50 | 61 | | | | | 7 | 78x1/6" | 0,38 |
| **65** | 40 | 66 | 79 | | | | | 8 | 95x1/6" | 0,61 |
| **80** | 45 | 81 | 93 | | | | | 8 | 110x1/4" | 0,86 |
| **100** | 54 | 100 | 114 | | | | | 10 | 130x1/4" | 1,15 |

## Welding liner
Anschweißkegelstutzen

**20110 T** **Dimensions** • Baumaße

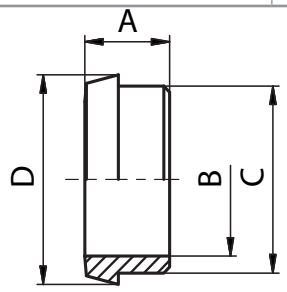


| DN | A | B | C | D | E | F | R | L | thread DIN 405 Rd x s | kg |
|---|---|---|---|---|---|---|---|---|---|---|
| **10** | 17 | 10 | 18 | 22,5 | | | | | | 0,03 |
| **15** | 17 | 16 | 24 | 28,5 | | | | | | 0,04 |
| **20** | 18 | 20 | 30 | 36,5 | | | | | | 0,07 |
| **25** | 22 | 26 | 35 | 44 | | | | | | 0,10 |
| **32** | 25 | 32 | 41 | 50 | | | | | | 0,14 |
| **40** | 26 | 38 | 48 | 56 | | | | | | 0,17 |
| **50** | 28 | 50 | 61 | 68,5 | | | | | | 0,25 |
| **65** | 32 | 66 | 79 | 86 | | | | | | 0,42 |
| **80** | 37 | 81 | 93 | 100 | | | | | | 0,54 |
| **100** | 44 | 100 | 114 | 121 | | | | | | 0,89 |

## Welding union - complete
Anschweißverschraubung - komplett

**20120 T** **Dimensions** • Baumaße

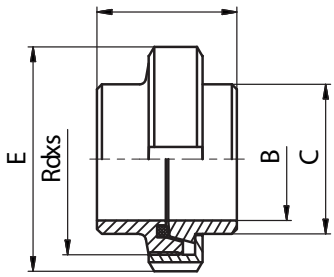


| DN | A | B | C | D | E | F | R | L | thread DIN 405 Rd x s | kg |
|---|---|---|---|---|---|---|---|---|---|---|
| **10** | 35 | 10 | 18 | | 38 | | | | 28x1/8" | 0,19 |
| **15** | 35 | 16 | 24 | | 44 | | | | 34x1/4" | 0,19 |
| **20** | 37 | 20 | 30 | | 54 | | | | 44x1/6" | 0,34 |
| **25** | 45 | 26 | 35 | | 63 | | | | 52x1/6" | 0,45 |
| **32** | 51 | 32 | 41 | | 70 | | | | 58x1/6" | 0,57 |
| **40** | 53 | 38 | 48 | | 78 | | | | 65x1/6" | 0,69 |
| **50** | 57 | 50 | 61 | | 92 | | | | 78x1/6" | 0,96 |
| **65** | 65 | 66 | 79 | | 112 | | | | 95x1/6" | 1,58 |
| **80** | 75 | 81 | 93 | | 127 | | | | 110x1/4" | 2,20 |
| **100** | 89 | 100 | 114 | | 148 | | | | 130x1/4" | 3,12 |

## Reducing male part
Reduziergewindestutzen

**20230** **Dimensions** • Baumaße

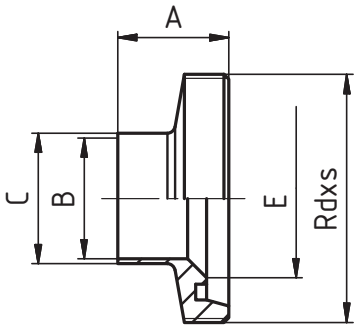


| DN | A | B | C | D | E | F | R | L | thread DIN 405 Rd x s | kg |
|---|---|---|---|---|---|---|---|---|---|---|
| **20/10** | 24 | 10 | 13 | | 20 | | | | 44x1/6" | |
| **20/15** | 24 | 16 | 19 | | 20 | | | | 44x1/6" | |
| **25/10** | 29 | 10 | 13 | | 26 | | | | 52x1/6" | |
| **25/15** | 29 | 16 | 19 | | 26 | | | | 52x1/6" | |
| **25/20** | 29 | 20 | 23 | | 26 | | | | 52x1/6" | |
| **32/15** | 32 | 16 | 19 | | 32 | | | | 58x1/6" | |
| **32/20** | 32 | 20 | 23 | | 32 | | | | 58x1/6" | |
| **32/25** | 32 | 26 | 29 | | 32 | | | | 58x1/6" | |
| **40/20** | 33 | 20 | 23 | | 38 | | | | 65x1/6" | |
| **40/25** | 33 | 26 | 29 | | 38 | | | | 65x1/6" | |
| **40/32** | 33 | 32 | 35 | | 38 | | | | 65x1/6" | |
| **50/20** | 35 | 20 | 23 | | 50 | | | | 78x1/6" | |
| **50/25** | 35 | 26 | 29 | | 50 | | | | 78x1/6" | |
| **50/32** | 35 | 32 | 35 | | 50 | | | | 78x1/6" | |
| **50/40** | 35 | 38 | 41 | | 50 | | | | 78x1/6" | |
| **65/40** | 40 | 38 | 41 | | 66 | | | | 95x1/6" | |
| **65/50** | 40 | 50 | 53 | | 66 | | | | 95x1/6" | |
| **80/40** | 45 | 38 | 41 | | 81 | | | | 110x1/4" | |
| **80/50** | 45 | 50 | 53 | | 81 | | | | 110x1/4" | |
| **80/65** | 45 | 66 | 70 | | 81 | | | | 110x1/4" | |
| **100/50** | 54 | 50 | 53 | | 100 | | | | 130x1/4" | |
| **100/65** | 54 | 66 | 70 | | 100 | | | | 130x1/4" | |
| **100/80** | 54 | 81 | 85 | | 100 | | | | 130x1/4" | |

## Reducing liner
Reduzierkegelstutzen

**20240** **Dimensions** • Baumaße

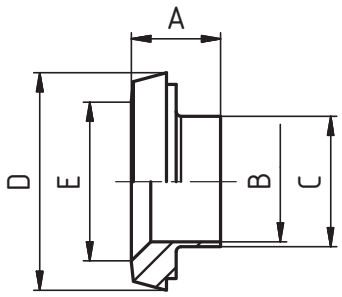


| DN | A | B | C | D | E | F | R | L | thread DIN 405 Rd x s | kg |
|---|---|---|---|---|---|---|---|---|---|---|
| **20/10** | 18 | 10 | 13 | 36,5 | 20 | | | | | |
| **20/15** | 18 | 16 | 19 | 36,5 | 20 | | | | | |
| **25/10** | 22 | 10 | 13 | 44 | 26 | | | | | |
| **25/15** | 22 | 16 | 19 | 44 | 26 | | | | | |
| **25/20** | 22 | 20 | 23 | 44 | 26 | | | | | |
| **32/15** | 25 | 16 | 19 | 50 | 32 | | | | | |
| **32/20** | 25 | 20 | 23 | 50 | 32 | | | | | |
| **32/25** | 25 | 26 | 29 | 50 | 32 | | | | | |
| **40/20** | 26 | 20 | 23 | 56 | 38 | | | | | |
| **40/25** | 26 | 26 | 29 | 56 | 38 | | | | | |
| **40/32** | 26 | 32 | 35 | 56 | 38 | | | | | |
| **50/20** | 28 | 20 | 23 | 68,5 | 50 | | | | | |
| **50/25** | 28 | 26 | 29 | 68,5 | 50 | | | | | |
| **50/32** | 28 | 32 | 35 | 68,5 | 50 | | | | | |
| **50/40** | 28 | 38 | 41 | 68,5 | 50 | | | | | |
| **65/40** | 32 | 38 | 41 | 86 | 66 | | | | | |
| **65/50** | 32 | 50 | 53 | 86 | 66 | | | | | |
| **80/40** | 37 | 38 | 41 | 100 | 81 | | | | | |
| **80/50** | 37 | 50 | 53 | 100 | 81 | | | | | |
| **80/65** | 37 | 66 | 70 | 100 | 81 | | | | | |
| **100/50** | 44 | 50 | 53 | 121 | 100 | | | | | |
| **100/65** | 44 | 66 | 70 | 121 | 100 | | | | | |
| **100/80** | 44 | 81 | 85 | 121 | 100 | | | | | |

## Blind nut
Blindmutter

**20250** **Dimensions** • Baumaße

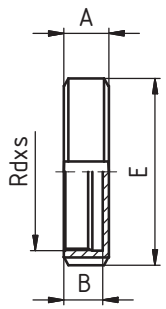


| DN | A | B | C | D | E | F | R | L | thread DIN 405 Rd x s | kg |
|---|---|---|---|---|---|---|---|---|---|---|
| **10** | 18 | 15 | | | 38 | | | | 28x1/8" | 0,08 |
| **15** | 18 | 15 | | | 44 | | | | 34x1/8" | 0,10 |
| **20** | 20 | 17 | | | 54 | | | | 44x1/6" | 0,14 |
| **25** | 21 | 18 | | | 63 | | | | 52x1/6" | 0,19 |
| **32** | 21 | 18 | | | 70 | | | | 58x1/6" | 0,23 |
| **40** | 21 | 18 | | | 78 | | | | 65x1/6" | 0,26 |
| **50** | 22 | 19 | | | 92 | | | | 78x1/6" | 0,38 |
| **65** | 25 | 21 | | | 112 | | | | 95x1/6" | 0,66 |
| **80** | 29 | 25 | | | 127 | | | | 110x1/4" | 1,00 |
| **100** | 31 | 26 | | | 148 | | | | 130x1/4" | 1,40 |
| **125** | 35 | 30 | | | 178 | | | | 160x1/4" | 1,97 |
| **150** | 40 | 34 | | | 210 | | | | 190x1/4" | 2,87 |

## Blind nut with boss
Blindmutter mit knopf

**20260** **Dimensions** • Baumaße

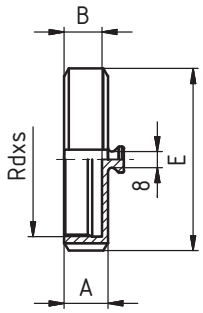


| DN | A | B | C | D | E | F | R | L | thread DIN 405 Rd x s | kg |
|---|---|---|---|---|---|---|---|---|---|---|
| **10** | 18 | 15 | | | 38 | | | | 28x1/8" | 0,09 |
| **15** | 18 | 15 | | | 44 | | | | 34x1/8" | 0,11 |
| **20** | 20 | 17 | | | 54 | | | | 44x1/6" | 0,15 |
| **25** | 21 | 18 | | | 63 | | | | 52x1/6" | 0,20 |
| **32** | 21 | 18 | | | 70 | | | | 58x1/6" | 0,24 |
| **40** | 21 | 18 | | | 78 | | | | 65x1/6" | 0,27 |
| **50** | 22 | 19 | | | 92 | | | | 78x1/6" | 0,39 |
| **65** | 25 | 21 | | | 112 | | | | 95x1/6" | 0,67 |
| **80** | 29 | 25 | | | 127 | | | | 110x1/4" | 1,01 |
| **100** | 31 | 26 | | | 148 | | | | 130x1/4" | 1,41 |
| **125** | 35 | 30 | | | 178 | | | | 160x1/4" | 1,98 |
| **150** | 40 | 34 | | | 210 | | | | 190x1/4" | 2,88 |

## Gasket disc - blind nut
Dichtscheibe - blindmutter

**20270** **Dimensions** • Baumaße

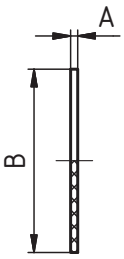


| DN | A | B | C | D | E | F | R | L | thread DIN 405 Rd x s | kg |
|---|---|---|---|---|---|---|---|---|---|---|
| **10** | 3 | 28 | | | | | | | | |
| **15** | 3 | 34 | | | | | | | | |
| **20** | 3 | 44 | | | | | | | | |
| **25** | 3 | 52 | | | | | | | | |
| **32** | 3 | 58 | | | | | | | | |
| **40** | 3 | 65 | | | | | | | | |
| **50** | 3 | 78 | | | | | | | | |
| **65** | 3 | 95 | | | | | | | | |
| **80** | 3 | 110 | | | | | | | | |
| **100** | 3 | 130 | | | | | | | | |
| **125** | 4 | 160 | | | | | | | | |
| **150** | 4 | 190 | | | | | | | | |

## Chain with hook and eye
Kette mit haken und öse

**20280** **Dimensions** • Baumaße

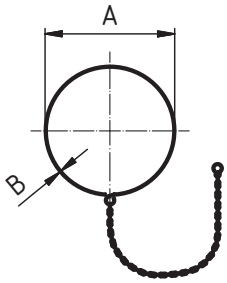


| DN | A | B | C | D | E | F | R | L | thread DIN 405 Rd x s | kg |
|---|---|---|---|---|---|---|---|---|---|---|
| **10** | 18 | 1,25 | | | | | | | | |
| **15** | 24 | 1,25 | | | | | | | | |
| **20** | 28 | 1,25 | | | | | | | | |
| **25** | 34 | 1,25 | | | | | | | | |
| **32** | 41 | 1,25 | | | | | | | | |
| **40** | 46 | 1,25 | | | | | | | | |
| **50** | 57 | 1,25 | | | | | | | | |
| **65** | 75 | 1,4 | | | | | | | | |
| **80** | 93 | 1,6 | | | | | | | | |
| **100** | 113 | 1,6 | | | | | | | | |
| **125** | 136 | 3 | | | | | | | | |
| **150** | 166 | 3 | | | | | | | | |

## Blind nut - complete
Blindmutter (komplett)

**20290** **Dimensions** • Baumaße

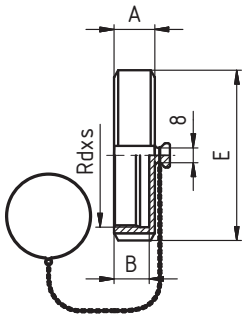


| DN | A | B | C | D | E | F | R | L | thread DIN 405 Rd x s | kg |
|---|---|---|---|---|---|---|---|---|---|---|
| **10** | 18 | 15 | | | 38 | | | | 28x1/8" | 0,12 |
| **15** | 18 | 15 | | | 44 | | | | 34x1/8" | 0,15 |
| **20** | 20 | 17 | | | 54 | | | | 44x1/6" | 0,19 |
| **25** | 21 | 18 | | | 63 | | | | 52x1/6" | 0,25 |
| **32** | 21 | 18 | | | 70 | | | | 58x1/6" | 0,29 |
| **40** | 21 | 18 | | | 78 | | | | 65x1/6" | 0,33 |
| **50** | 22 | 19 | | | 92 | | | | 78x1/6" | 0,46 |
| **65** | 25 | 21 | | | 112 | | | | 95x1/6" | 0,85 |
| **80** | 29 | 25 | | | 127 | | | | 110x1/4" | 1,11 |
| **100** | 31 | 26 | | | 148 | | | | 130x1/4" | 1,53 |
| **125** | 35 | 30 | | | 178 | | | | 160x1/4" | 2,12 |
| **150** | 40 | 34 | | | 210 | | | | 190x1/4" | 3,05 |

## Liner blank
Blindkegel

**20300** **Dimensions** • Baumaße

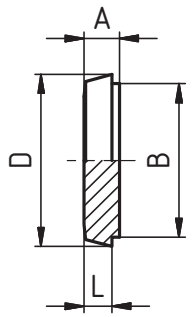


| DN | A | B | C | D | E | F | R | L | thread DIN 405 Rd x s | kg |
|---|---|---|---|---|---|---|---|---|---|---|
| **10** | 9 | 18 | | 22,5 | | | | 6 | | 0,02 |
| **15** | 9 | 24 | | 28,5 | | | | 6 | | 0,04 |
| **20** | 11 | 30 | | 36,5 | | | | 8 | | 0,07 |
| **25** | 13 | 35 | | 44 | | | | 10 | | 0,13 |
| **32** | 13 | 41 | | 50 | | | | 10 | | 0,17 |
| **40** | 13 | 48 | | 56 | | | | 10 | | 0,22 |
| **50** | 14 | 61 | | 68,5 | | | | 11 | | 0,35 |
| **65** | 16 | 79 | | 86 | | | | 12 | | 0,67 |
| **80** | 16 | 93 | | 100 | | | | 12 | | 0,92 |
| **100** | 20 | 114 | | 121 | | | | 15 | | 1,34 |
| **125** | 22 | 137 | | 150 | | | | 17 | | 1,68 |
| **150** | 24 | 163 | | 176 | | | | 18 | | 4,30 |

## Male part blank
Blindgewinde

**20330** **Dimensions** • Baumaße

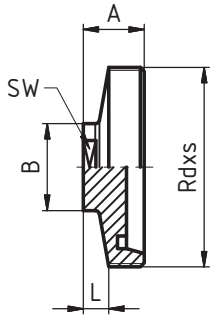


| DN | A | B | C | D | E | F | L | SW | thread DIN 405 Rd x s | kg |
|---|---|---|---|---|---|---|---|---|---|---|
| **10** | 22 | 22 | | | | | 10 | 19 | 28x1/8" | 0,06 |
| **15** | 22 | 25 | | | | | 10 | 22 | 34x1/8" | 0,09 |
| **20** | 24 | 25 | | | | | 10 | 22 | 44x1/6" | 0,13 |
| **25** | 24 | 34 | | | | | 10 | 27 | 52x1/6" | 0,19 |
| **32** | 24 | 34 | | | | | 10 | 27 | 58x1/6" | 0,22 |
| **40** | 24 | 34 | | | | | 10 | 27 | 65x1/6" | 0,25 |
| **50** | 24 | 34 | | | | | 10 | 27 | 78x1/6" | 0,35 |
| **65** | 28 | 34 | | | | | 10 | 27 | 95x1/6" | 0,64 |
| **80** | 30 | 34 | | | | | 10 | 27 | 110x1/4" | 1,30 |
| **100** | 30 | 34 | | | | | 10 | 27 | 130x1/4" | 2,10 |

## Blind nut with liner blank (complete)
Blindmutter mit blindkegel (komplett)

**20340** **Dimensions** • Baumaße

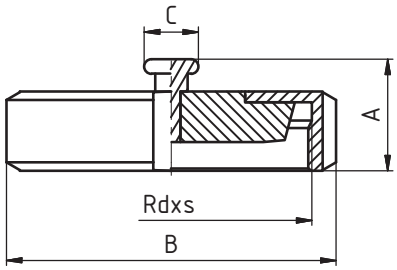


| DN | A | B | C | D | E | F | L | SW | thread DIN 405 Rd x s | kg |
|---|---|---|---|---|---|---|---|---|---|---|
| **10** | 27 | 38 | 15 | | | | | | 28x1/8" | 0,12 |
| **15** | 27 | 44 | 15 | | | | | | 34x1/8" | 0,15 |
| **20** | 29 | 54 | 15 | | | | | | 44x1/6" | 0,22 |
| **25** | 30 | 63 | 15 | | | | | | 52x1/6" | 0,32 |
| **32** | 30 | 70 | 15 | | | | | | 58x1/6" | 0,40 |
| **40** | 30 | 78 | 15 | | | | | | 65x1/6" | 0,49 |
| **50** | 31 | 92 | 15 | | | | | | 78x1/6" | 0,73 |
| **65** | 34 | 112 | 20 | | | | | | 95x1/6" | 1,25 |
| **80** | 38 | 127 | 20 | | | | | | 110x1/4" | 1,70 |
| **100** | 40 | 148 | 20 | | | | | | 130x1/4" | 2,79 |
| **125** | 44 | 178 | 20 | | | | | | 160x1/4" | 4,39 |
| **150** | 49 | 210 | 20 | | | | | | 190x1/4" | 6,54 |

## Male threaded outside
Einschraub gewindestutzen

**20350** **Dimensions** • Baumaße

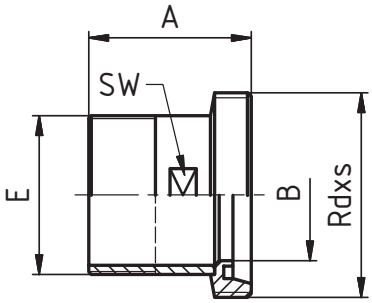


| DN | A | B | C | D | E | F | R | SW | thread DIN 405 Rd x s | kg |
|---|---|---|---|---|---|---|---|---|---|---|
| **10** | 40 | 10 | | | 3/8" | | | 15 | 28x1/8" | 0,06 |
| **15** | 43 | 16 | | | 1/2" | | | 20 | 34x1/8" | 0,09 |
| **20** | 47 | 20 | | | 3/4" | | | 25 | 44x1/6" | 0,15 |
| **25** | 52 | 26 | | | 1" | | | 32 | 52x1/6" | 0,21 |
| **25** | 47 | 26 | | | 3/4" | | | 25 | 52x1/6" | 0,20 |
| **32** | 52 | 32 | | | 1" | | | 32 | 58x1/6" | 0,23 |
| **32** | 54 | 32 | | | 1 1/4" | | | 40 | 58x1/6" | 0,25 |
| **40** | 64 | 38 | | | 1 1/4" | | | 40 | 65x1/6" | 0,31 |
| **40** | 54 | 38 | | | 1 1/2" | | | 45 | 65x1/6" | 0,32 |
| **50** | 57 | 50 | | | 2" | | | 57 | 78x1/6" | 0,43 |
| **65** | 66 | 66 | | | 2 1/2" | | | 73 | 95x1/6" | 0,65 |
| **80** | 75 | 81 | | | 3" | | | 86 | 110x1/4" | 1,00 |
| **100** | 83 | 100 | | | 4" | | | 110 | 130x1/4" | 1,33 |

## Liner threaded outside
Einschraub kegelstutzen

**20360** **Dimensions** • Baumaße

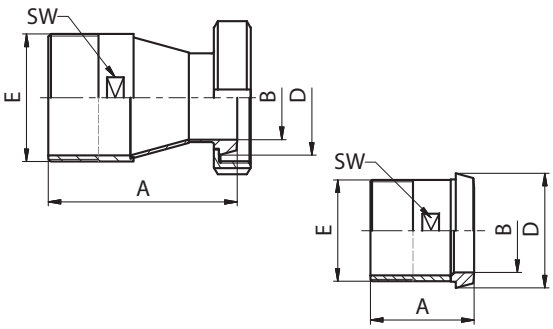


| DN | A | B | C | D | E | F | R | SW | thread DIN 405 Rd x s | kg |
|---|---|---|---|---|---|---|---|---|---|---|
| **10** | 37 | 10 | | 22,5 | 3/8" | | | 15 | 28x1/8" | 0,04 |
| **15** | 40 | 16 | | 28,5 | 1/2" | | | 20 | 34x1/8" | 0,06 |
| **20** | 47 | 20 | | 36,5 | 3/4" | | | 25 | 44x1/6" | 0,11 |
| **25** | 50 | 26 | | 44 | 1" | | | 32 | 52x1/6" | 0,16 |
| **32** | 54 | 32 | | 50 | 1 1/4" | | | 40 | 58x1/6" | 0,19 |
| **40** | 54 | 38 | | 56 | 1 1/2" | | | 45 | 65x1/6" | 0,25 |
| **50** | 54 | 50 | | 68,5 | 2" | | | 57 | 78x1/6" | 0,35 |
| **65** | 66 | 66 | | 86 | 2 1/2" | | | 73 | 95x1/6" | 0,55 |
| **80** | 75 | 81 | | 100 | 3" | | | 86 | 110x1/4" | 0,72 |
| **100** | 83 | 100 | | 121 | 4" | | | 110 | 130x1/4" | 1,12 |

## Male threaded inside
Aufschraub gewindestutzen

**20370** **Dimensions** • Baumaße

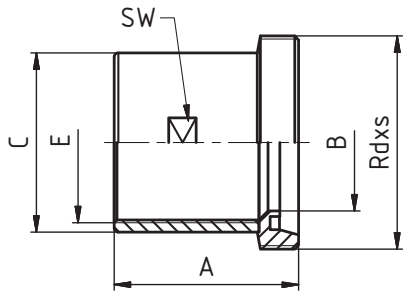


| DN | A | B | C | D | E | F | R | SW | thread DIN 405 Rd x s | kg |
|---|---|---|---|---|---|---|---|---|---|---|
| **10** | 31 | 10 | 20,5 | | 3/8" | | | 19 | 28x1/8" | 0,06 |
| **15** | 31 | 16 | 25 | | 1/2" | | | 24 | 34x1/8" | 0,08 |
| **20** | 35 | 20 | 32 | | 3/4" | | | 30 | 44x1/6" | 0,15 |
| **25** | 38 | 26 | 37 | | 1" | | | 35 | 52x1/6" | 0,19 |
| **32** | 40 | 32 | 46 | | 1 1/4" | | | 44 | 58x1/6" | 0,23 |
| **40** | 41 | 38 | 52,5 | | 1 1/2" | | | 51 | 65x1/6" | 0,28 |
| **50** | 43 | 50 | 65,5 | | 2" | | | 63 | 78x1/6" | 0,41 |
| **65** | 50 | 66 | 81 | | 2 1/2" | | | 78 | 95x1/6" | 0,60 |
| **80** | 56 | 81 | 95 | | 3" | | | 92 | 110x1/4" | 0,92 |
| **100** | 55 | 100 | 125 | | 4" | | | 120 | 130x1/4" | 1,32 |

## Liner threaded inside
Aufschraub kegelstutzen

**20380** **Dimensions** • Baumaße

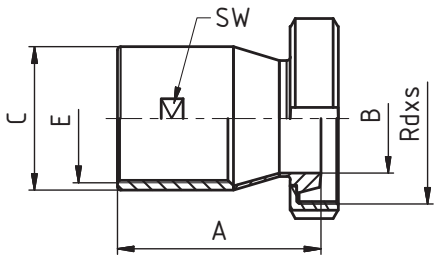


| DN | A | B | C | D | E | F | R | SW | thread DIN 405 Rd x s | kg |
|---|---|---|---|---|---|---|---|---|---|---|
| **10** | 44 | 10 | 20,5 | | 3/8" | | | 19 | 28x1/8" | 0,13 |
| **15** | 50 | 16 | 25 | | 1/2" | | | 24 | 34x1/8" | 0,17 |
| **20** | 53 | 20 | 32 | | 3/4" | | | 30 | 44x1/6" | 0,26 |
| **25** | 53 | 26 | 37 | | 1" | | | 35 | 52x1/6" | 0,35 |
| **32** | 60 | 32 | 46 | | 1 1/4" | | | 44 | 58x1/6" | 0,43 |
| **40** | 65 | 38 | 52,5 | | 1 1/2" | | | 51 | 65x1/6" | 0,52 |
| **50** | 67 | 50 | 65,5 | | 2" | | | 63 | 78x1/6" | 0,75 |
| **65** | 76 | 66 | 81 | | 2 1/2" | | | 78 | 95x1/6" | 1,27 |
| **80** | 80 | 81 | 95 | | 3" | | | 92 | 110x1/4" | 1,62 |
| **100** | 100 | 100 | 125 | | 4" | | | 120 | 130x1/4" | 2,54 |

## Flange PN 10 with groove
Kleinflansch PN mit nut

**20400**

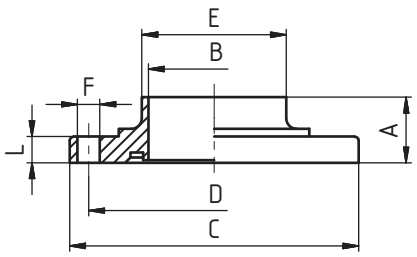


**Dimensions** • Baumaße

| DN | A | B | C | D | E | F | R | L | | kg |
|---|---|---|---|---|---|---|---|---|---|---|
| **10** | 20 | 10 | 62 | 44 | 15 | 8,5x4 | | 10 | | 0,20 |
| **15** | 20 | 16 | 68 | 50 | 21 | 8,5x4 | | 10 | | 0,26 |
| **20** | 20 | 20 | 75 | 59 | 25 | 8,5x4 | | 10 | | 0,29 |
| **25** | 20 | 26 | 87 | 73 | 31 | 8,5x4 | | 10 | | 0,39 |
| **32** | 20 | 32 | 92 | 78 | 37 | 8,5x4 | | 10 | | 0,46 |
| **40** | 25 | 38 | 97 | 82,5 | 43 | 8,5x4 | | 10 | | 0,47 |
| **50** | 25 | 50 | 110 | 95,5 | 55 | 8,5x4 | | 10 | | 0,59 |
| **65** | 25 | 66 | 127 | 112,5 | 72 | 8,5x4 | | 10 | | 0,75 |
| **80** | 30 | 81 | 142 | 127,5 | 87 | 8,5x4 | | 16 | | 1,28 |
| **100** | 30 | 100 | 162 | 147,5 | 106 | 8,5x4 | | 16 | | 1,72 |
| **125** | 40 | 125 | 200 | 180 | 132 | 11x6 | | 16 | | 2,87 |
| **150** | 45 | 150 | 230 | 210 | 157 | 11x6 | | 16 | | 3,85 |

## Flange PN 10 without groove
Kleinflansch PN ohne nut

**20410**

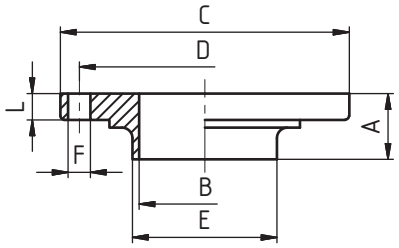


**Dimensions** • Baumaße

| DN | A | B | C | D | E | F | R | L | | kg |
|---|---|---|---|---|---|---|---|---|---|---|
| **10** | 20 | 10 | 62 | 44 | 15 | 8,5x4 | | 10 | | 0,20 |
| **15** | 20 | 16 | 68 | 50 | 21 | 8,5x4 | | 10 | | 0,26 |
| **20** | 20 | 20 | 75 | 59 | 25 | 8,5x4 | | 10 | | 0,29 |
| **25** | 20 | 26 | 87 | 73 | 31 | 8,5x4 | | 10 | | 0,39 |
| **32** | 20 | 32 | 92 | 78 | 37 | 8,5x4 | | 10 | | 0,46 |
| **40** | 25 | 38 | 97 | 82,5 | 43 | 8,5x4 | | 10 | | 0,47 |
| **50** | 25 | 50 | 110 | 95,5 | 55 | 8,5x4 | | 10 | | 0,59 |
| **65** | 25 | 66 | 127 | 112,5 | 72 | 8,5x4 | | 10 | | 0,75 |
| **80** | 30 | 81 | 142 | 127,5 | 87 | 8,5x4 | | 16 | | 1,28 |
| **100** | 30 | 100 | 162 | 147,5 | 106 | 8,5x6 | | 16 | | 1,72 |
| **125** | 40 | 125 | 200 | 180 | 132 | 11x6 | | 16 | | 2,87 |
| **150** | 45 | 150 | 230 | 210 | 157 | 11x6 | | 16 | | 3,85 |

## Gasket
Dichtring

**20040** **20041**

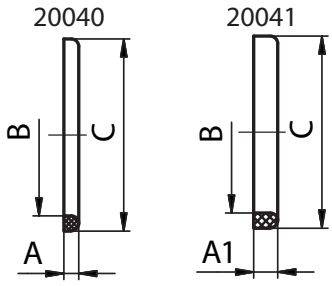


**Dimensions** • Baumaße

| DN | A | A1 | B | C | kg | F | R | L | thread DIN 405 Rd x s | kg |
|---|---|---|---|---|---|---|---|---|---|---|
| **10** | 4,5 | | 12 | 20 | 0,0012 | | | | | 0,0012 |
| **15** | 4,5 | | 18 | 26 | 0,0016 | | | | | 0,0016 |
| **20** | 4,5 | | 23 | 33 | 0,0026 | | | | | 0,0026 |
| **25** | 5 | 8 | 30 | 40 | 0,0036 | | | | | 0,0036 |
| **32** | 5 | 8 | 36 | 46 | 0,0040 | | | | | 0,0040 |
| **40** | 5 | 8 | 42 | 52 | 0,0048 | | | | | 0,0048 |
| **50** | 5 | 8 | 54 | 64 | 0,0062 | | | | | 0,0062 |
| **65** | 5 | 8 | 71 | 81 | 0,0070 | | | | | 0,0070 |
| **80** | 5 | 8 | 85 | 95 | 0,0080 | | | | | 0,0080 |
| **100** | 6 | 8 | 104 | 114 | 0,0134 | | | | | 0,0134 |
| **125** | 7 | 8 | 130 | 142 | 0,0236 | | | | | 0,0236 |
| **150** | 7 | 8 | 155 | 167 | 0,0276 | | | | | 0,0276 |

## Flange connection PN 10 - complete
Flanschverbindung PN 10 - komplett

**20420**

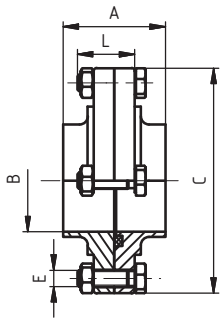


**Dimensions** • Baumaße

| DN | A | B | C | D | E | F | R | L | thread DIN 405 Rd x s | kg |
|---|---|---|---|---|---|---|---|---|---|---|
| **10** | 40 | 10 | 62 | | 4 x M8 | | | 28 | | 0,40 |
| **15** | 40 | 16 | 68 | | 4 x M8 | | | 28 | | 0,52 |
| **20** | 40 | 20 | 75 | | 4 x M8 | | | 28 | | 0,58 |
| **25** | 40 | 26 | 87 | | 4 x M8 | | | 28 | | 0,78 |
| **32** | 40 | 32 | 92 | | 4 x M8 | | | 28 | | 0,92 |
| **40** | 50 | 38 | 97 | | 4 x M8 | | | 28 | | 0,94 |
| **50** | 50 | 50 | 110 | | 4 x M8 | | | 28 | | 1,18 |
| **65** | 50 | 66 | 127 | | 4 x M8 | | | 28 | | 1,50 |
| **80** | 60 | 81 | 142 | | 4 x M8 | | | 40 | | 2,56 |
| **100** | 60 | 100 | 162 | | 4 x M8 | | | 40 | | 3,44 |
| **125** | 80 | 125 | 200 | | 6 x M10 | | | 45 | | 5,74 |
| **150** | 90 | 150 | 230 | | 6 x M10 | | | 45 | | 7,70 |

## Liner hose fitting - P
Schlauchstutzen - G

**20510** **Dimensions** • Baumaße

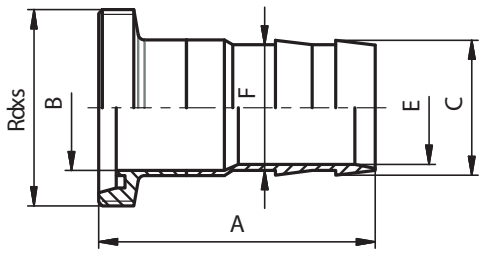


| DN | A | B | C | D | E | F | R | L | thread DIN 405 Rd x s | kg |
|---|---|---|---|---|---|---|---|---|---|---|
| **10** | 60 | 10 | 12 | | 7 | 10 | | | 28x1/8" | 0,05 |
| **15** | 61 | 16 | 18,5 | | 13 | 15 | | | 34x1/8" | 0,08 |
| **20** | 65 | 20 | 23 | | 16 | 20 | | | 44x1/6" | 0,17 |
| **25** | 70 | 26 | 28 | | 20 | 25 | | | 52x1/6" | 0,23 |
| **32** | 84 | 32 | 35,6 | | 27 | 32 | | | 58x1/6" | 0,33 |
| **40** | 95 | 38 | 43,6 | | 35 | 40 | | | 65x1/6" | 0,52 |
| **50** | 110 | 50 | 53,6 | | 45 | 50 | | | 78x1/6" | 0,66 |
| **65** | 133 | 66 | 66,6 | | 58 | 65 | | | 95x1/6" | 1,14 |
| **80** | 145 | 81 | 83,6 | | 75 | 80 | | | 110x1/4" | 1,50 |
| **100** | 161 | 100 | 103,6 | | 95 | 100 | | | 130x1/4" | 2,40 |

## Liner hose fitting - K
Schlauchstutzen - K

**20520** **Dimensions** • Baumaße

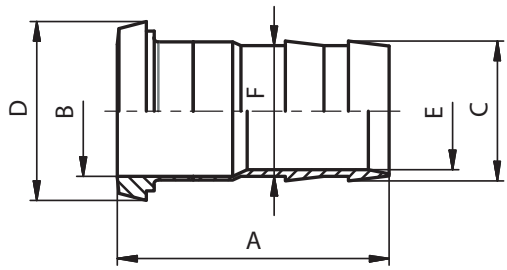


| DN | A | B | C | D | E | F | R | L | thread DIN 405 Rd x s | kg |
|---|---|---|---|---|---|---|---|---|---|---|
| **10** | 60 | 10 | 12 | 22,5 | 7 | 10 | | | | 0,04 |
| **15** | 61 | 16 | 18,5 | 28,5 | 13 | 15 | | | | 0,06 |
| **20** | 65 | 20 | 23 | 36,5 | 16 | 20 | | | | 0,13 |
| **25** | 70 | 26 | 28 | 44 | 20 | 25 | | | | 0,19 |
| **32** | 77 | 32 | 35,6 | 50 | 27 | 32 | | | | 0,27 |
| **40** | 88 | 38 | 43,6 | 56 | 35 | 40 | | | | 0,42 |
| **50** | 103 | 50 | 53,6 | 68,5 | 45 | 50 | | | | 0,58 |
| **65** | 125 | 66 | 66,6 | 86 | 58 | 65 | | | | 1,08 |
| **80** | 137 | 81 | 83,6 | 100 | 75 | 80 | | | | 1,32 |
| **100** | 151 | 100 | 103,6 | 121 | 95 | 100 | | | | 2,13 |

## Liner hose fitting - S
Schlauchstutzen - S

**20530** **Dimensions** • Baumaße

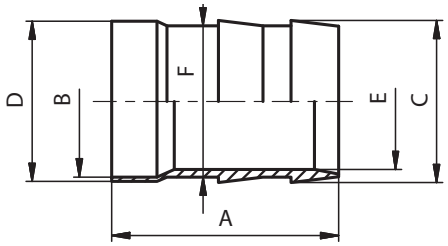


| DN | A | B | C | D | E | F | R | L | thread DIN 405 Rd x s | kg |
|---|---|---|---|---|---|---|---|---|---|---|
| **10** | 43 | 10 | 12 | 13 | 7 | 10 | | | | 0,02 |
| **15** | 44 | 16 | 18,5 | 19 | 13 | 15 | | | | 0,04 |
| **20** | 47 | 20 | 23 | 23 | 16 | 20 | | | | 0,06 |
| **25** | 48 | 26 | 28 | 29 | 20 | 25 | | | | 0,06 |
| **32** | 52 | 32 | 35,6 | 35 | 27 | 32 | | | | 0,08 |
| **40** | 62 | 38 | 43,6 | 41 | 35 | 40 | | | | 0,12 |
| **50** | 75 | 50 | 53,6 | 53 | 45 | 50 | | | | 0,22 |
| **65** | 93 | 66 | 66,6 | 70 | 58 | 65 | | | | 0,58 |
| **80** | 100 | 81 | 83,6 | 85 | 75 | 80 | | | | 0,68 |
| **100** | 107 | 100 | 103,6 | 104 | 95 | 100 | | | | 1,72 |

## Liner hose fitting - C
Schlauchstutzen - C

**20540** **Dimensions** • Baumaße

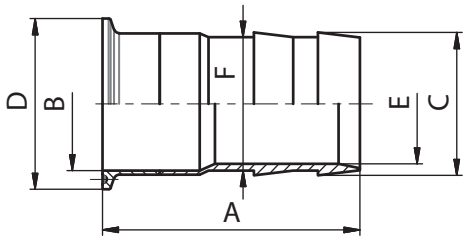


| DN | A | B | C | D | E | F | R | L | thread DIN 405 Rd x s | kg |
|---|---|---|---|---|---|---|---|---|---|---|
| **10** | 61 | 10 | 12 | 34 | 7 | 10 | | | | 0,05 |
| **15** | 62 | 16 | 18,5 | 34 | 13 | 15 | | | | 0,08 |
| **20** | 65 | 20 | 23 | 34 | 16 | 20 | | | | 0,17 |
| **25** | 69,5 | 26 | 28 | 50,5 | 20 | 25 | | | | 0,23 |
| **32** | 73,5 | 32 | 35,6 | 50,5 | 27 | 32 | | | | 0,33 |
| **40** | 83,5 | 38 | 43,6 | 50,5 | 35 | 40 | | | | 0,52 |
| **50** | 96,5 | 50 | 53,6 | 64 | 45 | 50 | | | | 0,66 |
| **65** | 121 | 66 | 66,6 | 91 | 58 | 65 | | | | 1,14 |
| **80** | 128 | 81 | 83,6 | 106 | 75 | 80 | | | | 1,50 |
| **100** | 135 | 100 | 103,6 | 119 | 95 | 100 | | | | 2,40 |

## Connecting clamp/clamp for hoses
Cupplungsstück C/C zu schlauch

**20549**

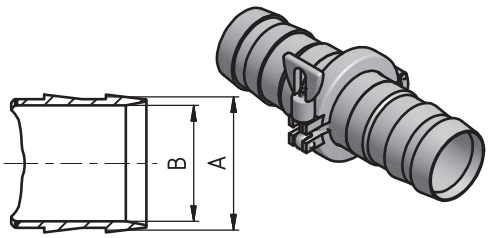


**Dimensions** • Baumaße

| DN | A | B | C | D | E | F | R | L | thread DIN 405 Rd x s | kg |
|---|---|---|---|---|---|---|---|---|---|---|
| **10** | 12 | 7 | | | | | | | | 0,30 |
| **15** | 18,5 | 13 | | | | | | | | 0,32 |
| **20** | 23 | 16 | | | | | | | | 0,36 |
| **25** | 28 | 20 | | | | | | | | 0,41 |
| **32** | 35,6 | 27 | | | | | | | | 0,43 |
| **40** | 43,6 | 35 | | | | | | | | 0,49 |
| **50** | 53,6 | 45 | | | | | | | | 0,61 |
| **65** | 66,6 | 58 | | | | | | | | 1,47 |
| **80** | 83,6 | 75 | | | | | | | | 1,63 |
| **100** | 103,6 | 95 | | | | | | | | 2,71 |

## Connecting piece G - G
Kupplungsstück G - G

**20570**

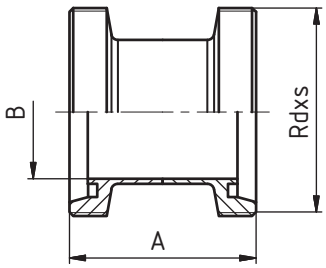


**Dimensions** • Baumaße

| DN | A | B | C | D | E | F | R | L | thread DIN 405 Rd x s | kg |
|---|---|---|---|---|---|---|---|---|---|---|
| **10** | 42 | 10 | | | | | | | 28x1/8" | 0,09 |
| **15** | 42 | 16 | | | | | | | 34x1/8" | 0,11 |
| **20** | 48 | 20 | | | | | | | 44x1/6" | 0,21 |
| **25** | 58 | 26 | | | | | | | 52x1/6" | 0,28 |
| **32** | 64 | 32 | | | | | | | 58x1/6" | 0,36 |
| **40** | 66 | 38 | | | | | | | 65x1/6" | 0,46 |
| **50** | 70 | 50 | | | | | | | 78x1/6" | 0,67 |
| **65** | 80 | 66 | | | | | | | 95x1/6" | 1,06 |
| **80** | 90 | 81 | | | | | | | 110x1/4" | 1,41 |
| **100** | 108 | 100 | | | | | | | 130x1/4" | 2,13 |

## Connecting piece K/M - G
Kupplungsstück K/M - G

**20580**

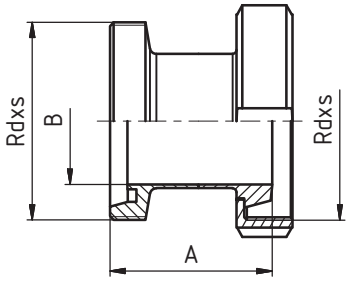


**Dimensions** • Baumaße

| DN | A | B | C | D | E | F | R | L | thread DIN 405 Rd x s | kg |
|---|---|---|---|---|---|---|---|---|---|---|
| **10** | 42 | 10 | | | | | | | 28x1/8" | 0,13 |
| **15** | 42 | 16 | | | | | | | 34x1/8" | 0,16 |
| **20** | 48 | 20 | | | | | | | 44x1/6" | 0,28 |
| **25** | 58 | 26 | | | | | | | 52x1/6" | 0,39 |
| **32** | 64 | 32 | | | | | | | 58x1/6" | 0,47 |
| **40** | 66 | 38 | | | | | | | 65x1/6" | 0,55 |
| **50** | 70 | 50 | | | | | | | 78x1/6" | 0,77 |
| **65** | 80 | 66 | | | | | | | 95x1/6" | 1,24 |
| **80** | 90 | 81 | | | | | | | 110x1/4" | 1,73 |
| **100** | 108 | 100 | | | | | | | 130x1/4" | 2,40 |

## Connecting piece K/M - K/M
Kupplungsstück K/M - K/M

**20590**

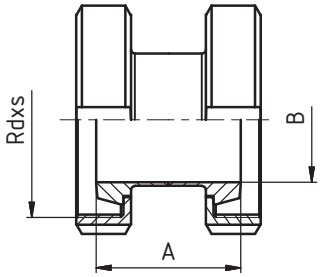


**Dimensions** • Baumaße

| DN | A | B | C | D | E | F | R | L | thread DIN 405 Rd x s | kg |
|---|---|---|---|---|---|---|---|---|---|---|
| **10** | 34 | 10 | | | | | | | 28x1/8" | 0,18 |
| **15** | 34 | 16 | | | | | | | 34x1/8" | 0,22 |
| **20** | 36 | 20 | | | | | | | 44x1/6" | 0,38 |
| **25** | 44 | 26 | | | | | | | 52x1/6" | 0,54 |
| **32** | 50 | 32 | | | | | | | 58x1/6" | 0,66 |
| **40** | 52 | 38 | | | | | | | 65x1/6" | 0,76 |
| **50** | 56 | 50 | | | | | | | 78x1/6" | 1,06 |
| **65** | 64 | 66 | | | | | | | 95x1/6" | 1,72 |
| **80** | 74 | 81 | | | | | | | 110x1/4" | 2,36 |
| **100** | 88 | 100 | | | | | | | 130x1/4" | 3,38 |

## Recucing piece G - G
Reduzierstück G - G

**20630**

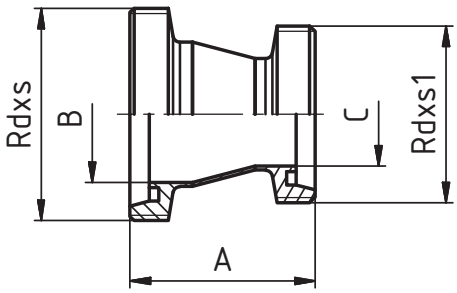


**Dimensions** • Baumaße

| DN | A | B | C | D | E | F | thread DIN 405 Rd x s | thread DIN 405 Rd x s1 | kg |
|---|---|---|---|---|---|---|---|---|---|
| **32/25** | 55 | 32 | 26 | | | | 58x1/6" | 52x1/6" | 0,36 |
| **40/25** | 66 | 38 | 25 | | | | 65x1/6" | 52x1/6" | 0,40 |
| **40/32** | 55 | 38 | 32 | | | | 65x1/6" | 58x1/6" | 0,46 |
| **50/32** | 78 | 50 | 32 | | | | 78x1/6" | 58x1/6" | 0,61 |
| **50/40** | 68 | 50 | 38 | | | | 78x1/6" | 65x1/6" | 0,67 |
| **65/40** | 98 | 66 | 38 | | | | 95x1/6" | 65x1/6" | 1,00 |
| **65/50** | 77 | 66 | 50 | | | | 95x1/6" | 78x1/6" | 1,06 |
| **80/50** | 104 | 81 | 50 | | | | 110x1/4" | 78x1/6" | 1,37 |
| **80/65** | 77 | 81 | 66 | | | | 110x1/4" | 95x1/6" | 1,41 |
| **100/65** | 116 | 100 | 66 | | | | 130x1/4" | 95x1/6" | 2,08 |
| **100/80** | 89 | 100 | 81 | | | | 130x1/4" | 110x1/4" | 2,13 |

## Recucing piece G - K/M
Reduzierstück G - K/M

**20640**

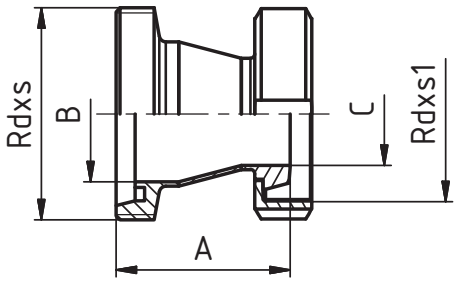


**Dimensions** • Baumaße

| DN | A | B | C | D | E | F | thread DIN 405 Rd x s | thread DIN 405 Rd x s1 | kg |
|---|---|---|---|---|---|---|---|---|---|
| **32/25** | 51 | 32 | 26 | | | | 58x1/6" | 52x1/6" | 0,47 |
| **40/25** | 62 | 38 | 26 | | | | 65x1/6" | 52x1/6" | 0,50 |
| **40/32** | 59 | 38 | 32 | | | | 65x1/6" | 58x1/6" | 0,55 |
| **50/32** | 74 | 50 | 32 | | | | 78x1/6" | 58x1/6" | 0,71 |
| **50/40** | 64 | 50 | 38 | | | | 78x1/6" | 65x1/6" | 0,77 |
| **65/40** | 94 | 66 | 38 | | | | 95x1/6" | 65x1/6" | 1,19 |
| **65/50** | 73 | 66 | 50 | | | | 95x1/6" | 78x1/6" | 1,24 |
| **80/50** | 100 | 81 | 50 | | | | 110x1/4" | 78x1/6" | 1,68 |
| **80/65** | 73 | 81 | 66 | | | | 110x1/4" | 95x1/6" | 1,73 |
| **100/65** | 112 | 100 | 66 | | | | 130x1/4" | 95x1/6" | 2,35 |
| **100/80** | 85 | 100 | 81 | | | | 130x1/4" | 110x1/4" | 2,40 |

## Recucing piece K/M - K/M
Reduzierstück K/M - K/M

**20650**

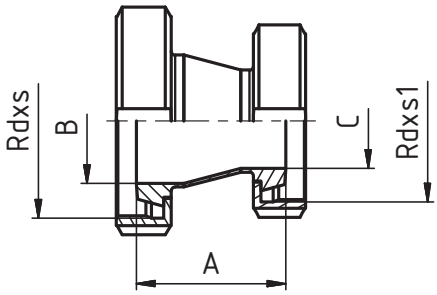


**Dimensions** • Baumaße

| DN | A | B | C | D | E | F | thread DIN 405 Rd x s | thread DIN 405 Rd x s1 | kg |
|---|---|---|---|---|---|---|---|---|---|
| **32/25** | 47 | 32 | 26 | | | | 58x1/6" | 52x1/6" | 0,66 |
| **40/25** | 58 | 38 | 26 | | | | 65x1/6" | 52x1/6" | 0,71 |
| **40/32** | 47 | 38 | 32 | | | | 65x1/6" | 58x1/6" | 0,76 |
| **50/32** | 70 | 50 | 32 | | | | 78x1/6" | 58x1/6" | 1,01 |
| **50/40** | 60 | 50 | 38 | | | | 78x1/6" | 65x1/6" | 1,06 |
| **65/40** | 90 | 66 | 38 | | | | 95x1/6" | 65x1/6" | 1,67 |
| **65/50** | 69 | 66 | 50 | | | | 95x1/6" | 78x1/6" | 1,72 |
| **80/50** | 96 | 81 | 50 | | | | 110x1/4" | 78x1/6" | 2,30 |
| **80/65** | 69 | 81 | 66 | | | | 110x1/4" | 95x1/6" | 2,36 |
| **100/65** | 107 | 100 | 66 | | | | 130x1/4" | 95x1/6" | 3,32 |
| **100/80** | 80 | 100 | 81 | | | | 130x1/4" | 110x1/4" | 3,38 |

## Recucing piece K/M - G
Reduzierstück K/M - G

**20660**

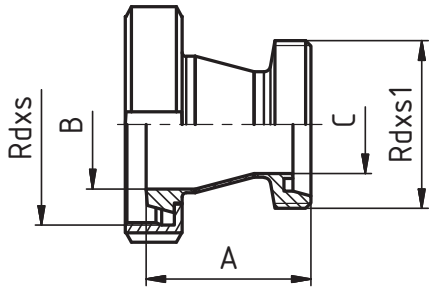


**Dimensions** • Baumaße

| DN | A | B | C | D | E | F | thread DIN 405 Rd x s | thread DIN 405 Rd x s1 | kg |
|---|---|---|---|---|---|---|---|---|---|
| **32/25** | 51 | 32 | 26 | | | | 58x1/6" | 52x1/6" | 0,47 |
| **40/25** | 62 | 38 | 25 | | | | 65x1/6" | 52x1/6" | 0,50 |
| **40/32** | 59 | 38 | 32 | | | | 65x1/6" | 58x1/6" | 0,55 |
| **50/32** | 74 | 50 | 32 | | | | 78x1/6" | 58x1/6" | 0,71 |
| **50/40** | 64 | 50 | 38 | | | | 78x1/6" | 65x1/6" | 0,77 |
| **65/40** | 94 | 66 | 38 | | | | 95x1/6" | 65x1/6" | 1,19 |
| **65/50** | 73 | 66 | 50 | | | | 95x1/6" | 78x1/6" | 1,24 |
| **80/50** | 100 | 81 | 50 | | | | 110x1/4" | 78x1/6" | 1,68 |
| **80/65** | 73 | 81 | 66 | | | | 110x1/4" | 95x1/6" | 1,73 |
| **100/65** | 112 | 100 | 66 | | | | 130x1/4" | 95x1/6" | 2,35 |
| **100/80** | 85 | 100 | 81 | | | | 130x1/4" | 110x1/4" | 2,40 |

## Flange PN 10
Flansch PN 10

**20700**

**DIN 2576**

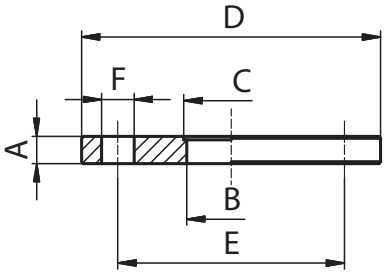


**Dimensions** • Baumaße

| DN | A | B | C | D | E | F | R | L | thread DIN 405 Rd x s | kg |
|---|---|---|---|---|---|---|---|---|---|---|
| **10** | 14 | 10 | 12,2 | 90 | 60 | 14x4 | | | | 0,50 |
| **15** | 14 | 16 | 18,2 | 95 | 65 | 14x4 | | | | 0,60 |
| **20** | 14 | 20 | 22,2 | 105 | 75 | 14x4 | | | | 0,85 |
| **25** | 14 | 26 | 28,2 | 115 | 85 | 14x4 | | | | 1,11 |
| **32** | 14 | 32 | 34,2 | 140 | 100 | 18x4 | | | | 1,64 |
| **40** | 14 | 38 | 40,2 | 150 | 110 | 18x4 | | | | 1,80 |
| **50** | 14 | 50 | 52,2 | 165 | 125 | 18x4 | | | | 2,30 |
| **65** | 14 | 66 | 70,3 | 185 | 145 | 18x4 | | | | 2,88 |
| **80** | 16 | 81 | 85,3 | 200 | 160 | 18x8 | | | | 3,20 |
| **100** | 16 | 100 | 104,3 | 220 | 180 | 18x8 | | | | 4,00 |
| **125** | 20 | 125 | 129,5 | 250 | 210 | 18x8 | | | | 5,00 |
| **150** | 24 | 150 | 154,5 | 285 | 240 | 22x8 | | | | 6,70 |

## Flange PN 10 ECO
Flansch PN 10 ECO

**20700 ECO**

**DIN 2576**

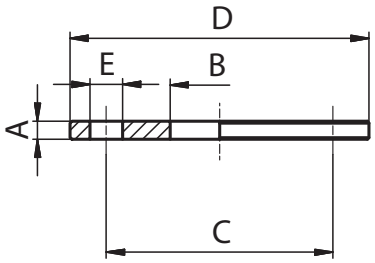


**Dimensions** • Baumaße

| DN | A | B | C | D | E | F | R | L | thread DIN 405 Rd x s | kg |
|---|---|---|---|---|---|---|---|---|---|---|
| **25** | 10 | 29 | 85 | 115 | 14x4 | | | | | 0,69 |
| **32** | 10 | 35 | 100 | 140 | 18x4 | | | | | 1,00 |
| **40** | 10 | 41,5 | 110 | 150 | 18x4 | | | | | 1,16 |
| **50** | 10 | 52,8 | 125 | 165 | 18x4 | | | | | 1,23 |
| **65** | 10 | 71,2 | 145 | 185 | 18x4 | | | | | 1,68 |
| **80** | 10 | 86,5 | 160 | 200 | 18x8 | | | | | 1,62 |
| **100** | 10 | 105,5 | 180 | 220 | 18x8 | | | | | 1,89 |
| **125** | 12 | 131 | 210 | 250 | 18x8 | | | | | 3,33 |
| **150** | 12 | 155,5 | 240 | 285 | 22x8 | | | | | 4,12 |

## Flange connection PN 10 - complete
Flanschverbindung PN 10 - komplett

**20720**

**DIN 2576**

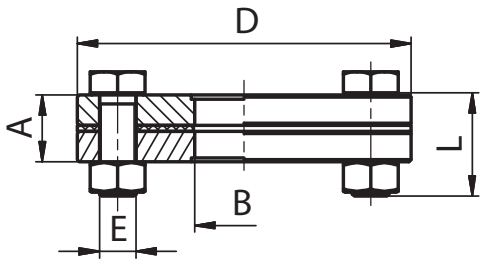


**Dimensions** • Baumaße

| DN | A | B | C | D | E | F | R | L | Rd x s | kg |
|---|---|---|---|---|---|---|---|---|---|---|
| **10** | 31 | 10 | | 90 | 4 x M12 | | | 40 | | 1,30 |
| **15** | 31 | 16 | | 95 | 4 x M12 | | | 40 | | 1,40 |
| **20** | 31 | 20 | | 105 | 4 x M12 | | | 45 | | 2,00 |
| **25** | 31 | 26 | | 115 | 4 x M12 | | | 45 | | 2,30 |
| **32** | 31 | 32 | | 140 | 4 x M16 | | | 50 | | 3,50 |
| **40** | 31 | 38 | | 150 | 4 x M16 | | | 50 | | 4,00 |
| **50** | 31 | 50 | | 165 | 4 x M16 | | | 55 | | 5,10 |
| **65** | 32 | 66 | | 185 | 4 x M16 | | | 55 | | 6,00 |
| **80** | 36 | 81 | | 200 | 8 x M16 | | | 55 | | 7,50 |
| **100** | 36 | 100 | | 220 | 8 x M16 | | | 55 | | 8,30 |
| **125** | 44 | 125 | | 250 | 8 x M16 | | | 60 | | 13,00 |
| **150** | 52 | 150 | | 285 | 8 x M20 | | | 65 | | 16,70 |

## Flange connection PN 10 ECO - complete
Flanschverbindung PN 10 ECO - komplett

**20720 ECO**

**DIN 2576**

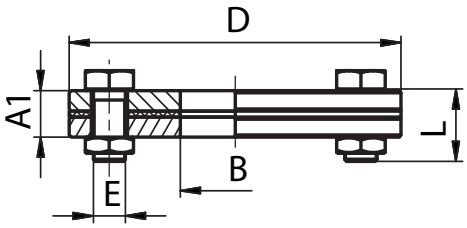


**Dimensions** • Baumaße

| DN | A1 | B | C | D | E | F | R | L | thread DIN 405 Rd x s | kg |
|---|---|---|---|---|---|---|---|---|---|---|
| **10** | 23 | 17,7 | | 90 | 4 x M12 | | | 35 | | 1,20 |
| **15** | 23 | 18,6 | | 95 | 4 x M12 | | | 35 | | 1,30 |
| **20** | 23 | 26 | | 105 | 4 x M12 | | | 35 | | 1,60 |
| **25** | 23 | 31 | | 115 | 4 x M12 | | | 35 | | 1,80 |
| **32** | 23 | 39 | | 140 | 4 x M16 | | | 40 | | 2,80 |
| **40** | 23 | 45,5 | | 150 | 4 x M16 | | | 40 | | 3,10 |
| **50** | 23 | 54,5 | | 165 | 4 x M16 | | | 40 | | 3,80 |
| **65** | 24 | 71 | | 185 | 4 x M16 | | | 40 | | 4,20 |
| **80** | 24 | 85 | | 200 | 8 x M16 | | | 40 | | 4,80 |
| **100** | 24 | 105,5 | | 220 | 8 x M16 | | | 40 | | 5,30 |
| **125** | 28 | 130,5 | | 250 | 8 x M16 | | | 45 | | 8,30 |
| **150** | 28 | 155,5 | | 285 | 8 x M20 | | | 50 | | 11,00 |

## Flat seal for flange PN 10
Flanschdichtung PN 10

**20710** — **DIN 2576**

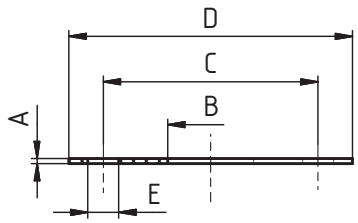


**Dimensions** • Baumaße

| DN | A | B | C | D | E | F | R | L | thread DIN 405 Rd x s | kg |
|---|---|---|---|---|---|---|---|---|---|---|
| **10** | 3 | 10 | 60 | 90 | 14x4 | | | | | |
| **15** | 3 | 16 | 65 | 95 | 14x4 | | | | | |
| **20** | 3 | 20 | 75 | 105 | 14x4 | | | | | |
| **25** | 3 | 26 | 85 | 115 | 14x4 | | | | | |
| **32** | 3 | 32 | 100 | 140 | 18x4 | | | | | |
| **40** | 3 | 38 | 110 | 150 | 18x4 | | | | | |
| **50** | 3 | 50 | 125 | 165 | 18x4 | | | | | |
| **65** | 4 | 66 | 145 | 185 | 18x4 | | | | | |
| **80** | 4 | 81 | 160 | 200 | 18x8 | | | | | |
| **100** | 4 | 100 | 180 | 220 | 18x8 | | | | | |
| **125** | 4 | 125 | 210 | 250 | 18x8 | | | | | |
| **150** | 4 | 150 | 240 | 285 | 22x8 | | | | | |

## Flange PN 16
Flansch PN 16

**20730** — **DIN 2633**

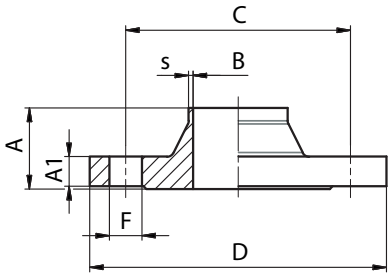


**Dimensions** • Baumaße

| DN | A | A1 | B | C | D | F | s | | | kg |
|---|---|---|---|---|---|---|---|---|---|---|
| **10** | 35 | 14 | 10 | 60 | 90 | 14x4 | 1,5 | | | 0,58 |
| **15** | 35 | 14 | 16 | 65 | 95 | 14x4 | 1,5 | | | 0,65 |
| **20** | 38 | 16 | 20 | 75 | 105 | 14x4 | 1,5 | | | 0,95 |
| **25** | 38 | 16 | 26 | 85 | 115 | 14x4 | 1,5 | | | 1,14 |
| **32** | 40 | 16 | 32 | 100 | 140 | 18x4 | 1,5 | | | 1,60 |
| **40** | 42 | 16 | 38 | 110 | 150 | 18x4 | 1,5 | | | 1,80 |
| **50** | 45 | 18 | 50 | 125 | 165 | 18x4 | 1,5 | | | 2,53 |
| **65** | 45 | 18 | 66 | 145 | 185 | 18x4 | 2 | | | 3,06 |
| **80** | 50 | 20 | 81 | 160 | 200 | 18x8 | 2,5 | | | 3,70 |
| **100** | 52 | 20 | 100 | 180 | 220 | 18x8 | 2,5 | | | 4,62 |
| **125** | 55 | 22 | 125 | 210 | 250 | 18x8 | 2,5 | | | 6,30 |
| **150** | 55 | 22 | 150 | 240 | 285 | 22x8 | 2,5 | | | 7,75 |

## Flange connection PN 16 - complete
Flanschverbindung PN 16 - komplett

**20740** — **DIN 2633**

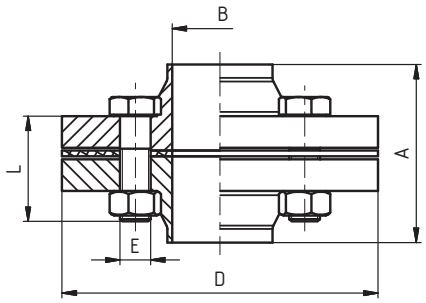


**Dimensions** • Baumaße

| DN | A | B | C | D | E | F | R | L | thread DIN 405 Rd x s | kg |
|---|---|---|---|---|---|---|---|---|---|---|
| **10** | 73 | 10 | | 90 | 4 x M12 | | | 45 | | 1,16 |
| **15** | 73 | 16 | | 95 | 4 x M12 | | | 45 | | 1,30 |
| **20** | 79 | 20 | | 105 | 4 x M12 | | | 45 | | 1,90 |
| **25** | 79 | 26 | | 115 | 4 x M12 | | | 50 | | 2,28 |
| **32** | 83 | 32 | | 140 | 4 x M16 | | | 50 | | 3,20 |
| **40** | 88 | 38 | | 150 | 4 x M16 | | | 50 | | 3,60 |
| **50** | 94 | 50 | | 165 | 4 x M16 | | | 55 | | 5,06 |
| **65** | 94 | 66 | | 185 | 4 x M16 | | | 55 | | 6,12 |
| **80** | 104 | 81 | | 200 | 8 x M16 | | | 60 | | 7,40 |
| **100** | 108 | 100 | | 220 | 8 x M16 | | | 60 | | 9,24 |
| **125** | 114 | 125 | | 250 | 8 x M16 | | | 65 | | 12,60 |
| **150** | 114 | 150 | | 285 | 8 x M20 | | | 70 | | 15,5 |

## Flange AL
Flansch AL

**20780 AL** — **Dimensions** • Baumaße

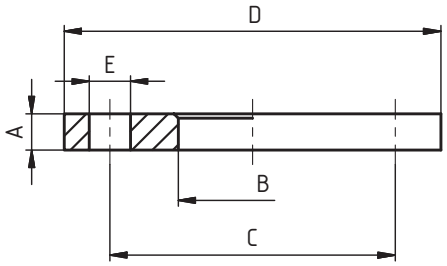


| DN | A | B | C | D | E | F | R | L | thread DIN 405 Rd x s | kg |
|---|---|---|---|---|---|---|---|---|---|---|
| **10** | 14 | 19 | 60 | 90 | 14x4 | | | | | 0,59 |
| **15** | 14 | 24 | 65 | 95 | 14x4 | | | | | 0,68 |
| **20** | 16 | 24 | 75 | 105 | 14x4 | | | | | 0,80 |
| **25** | 16 | 36 | 85 | 115 | 14x4 | | | | | 1,11 |
| **32** | 16 | 46 | 100 | 140 | 18x4 | | | | | 1,64 |
| **40** | 16 | 54 | 110 | 150 | 18x4 | | | | | 1,86 |
| **50** | 16 | 65 | 125 | 165 | 18x4 | | | | | 2,20 |
| **65** | 16 | 81 | 145 | 185 | 18x4 | | | | | 2,62 |
| **80** | 18 | 94 | 160 | 200 | 18x8 | | | | | 3,32 |
| **100** | 18 | 119 | 180 | 220 | 18x8 | | | | | 3,67 |
| **125** | 18 | 145 | 210 | 250 | 18x8 | | | | | 4,54 |
| **150** | 18 | 173 | 240 | 285 | 22x8 | | | | | 5,60 |

## Welding neck DIN
Vorschweissbördel DIN

**20790** — **DIN** — **Dimensions** • Baumaße

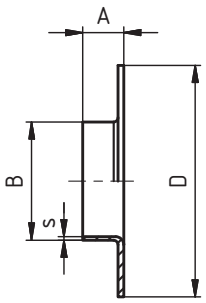


| DN | A | B | C | D | E | F | R | s | thread DIN 405 Rd x s | kg |
|---|---|---|---|---|---|---|---|---|---|---|
| **10** | | 12 | | 40 | | | | 1,5 | | |
| **15** | | 18 | | 45 | | | | 1,5 | | |
| **20** | | 23 | | 58 | | | | 1,5 | | |
| **25** | | 28 | | 68 | | | | 1,5 | | |
| **32** | | 35 | | 78 | | | | 1,5 | | |
| **40** | | 40 | | 88 | | | | 1,5 | | |
| **50** | | 52 | | 102 | | | | 1,5 | | |
| **65** | | 70 | | 122 | | | | 2,0 | | |
| **80** | | 85 | | 138 | | | | 2,0 | | |
| **100** | | 104 | | 158 | | | | 2,0 | | |
| **125** | | 129 | | 188 | | | | 2,0 | | |
| **150** | | 154 | | 212 | | | | 2,0 | | |

## Welding neck ISO
Vorschweissbördel ISO

**20795** — **ISO** — **Dimensions** • Baumaße

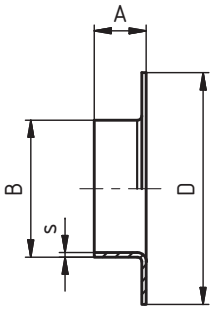


| DN | A | B | C | D | E | F | R | s | thread DIN 405 Rd x s | kg |
|---|---|---|---|---|---|---|---|---|---|---|
| **10** | | 17,2 | | 40 | | | | 2 | | |
| **15** | | 21,3 | | 45 | | | | 2 | | |
| **20** | | 26,9 | | 58 | | | | 2 | | |
| **25** | | 33,7 | | 68 | | | | 2 | | |
| **32** | | 42,4 | | 78 | | | | 2 | | |
| **40** | | 48,3 | | 88 | | | | 2 | | |
| **50** | | 60,3 | | 102 | | | | 2 | | |
| **65** | | 76,1 | | 122 | | | | 2 | | |
| **80** | | 88,9 | | 138 | | | | 3 | | |
| **100** | | 114,3 | | 158 | | | | 3 | | |
| **125** | | 139,7 | | 188 | | | | 3 | | |
| **150** | | 168,3 | | 212 | | | | 3 | | |

## Nipple
Nippel

**20800** — **Dimensions** • Baumaße

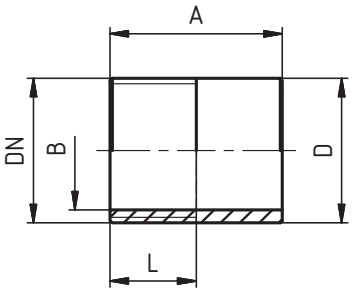


| DN | A | B | C | D | E | F | R | L | thread DIN 405 Rd x s | kg |
|---|---|---|---|---|---|---|---|---|---|---|
| **1/8"** | 30 | 7 | | 10,5 | | | | 10 | | 0,02 |
| **1/4"** | 30 | 9,3 | | 13,6 | | | | 11 | | 0,02 |
| **3/8"** | 30 | 13 | | 17,1 | | | | 10,5 | | 0,03 |
| **1/2"** | 35 | 16 | | 21,5 | | | | 15,5 | | 0,04 |
| **3/4"** | 40 | 21,6 | | 27 | | | | 16,5 | | 0,06 |
| **1"** | 40 | 27,5 | | 33,6 | | | | 20 | | 0,10 |
| **1 1/4"** | 50 | 36,6 | | 42,2 | | | | 20 | | 0,15 |
| **1 1/2"** | 50 | 41,5 | | 48,5 | | | | 22,5 | | 0,16 |
| **2"** | 50 | 53,6 | | 60,6 | | | | 25,5 | | 0,22 |
| **2 1/2"** | 60 | 68,9 | | 76,1 | | | | 30 | | 0,42 |
| **3"** | 70 | 81,5 | | 89,4 | | | | 34 | | 0,68 |
| **4"** | 80 | 105,8 | | 114,3 | | | | 39 | | 0,97 |

## Muff
Muffe

**20840** — **Dimensions** • Baumaße

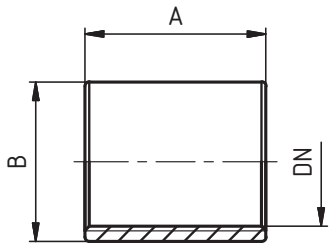


| DN | A | B | C | D | E | F | R | L | thread DIN 405 Rd x s | kg |
|---|---|---|---|---|---|---|---|---|---|---|
| 1/8" | 15 | 15 | | | | | | | | 0,02 |
| 1/4" | 25 | 18 | | | | | | | | 0,02 |
| 3/8" | 26 | 20,5 | | | | | | | | 0,03 |
| 1/2" | 33 | 25 | | | | | | | | 0,08 |
| 3/4" | 35 | 32 | | | | | | | | 0,11 |
| 1" | 42 | 37 | | | | | | | | 0,17 |
| 1 1/4" | 45 | 46 | | | | | | | | 0,32 |
| 1 1/2" | 45 | 52,5 | | | | | | | | 0,40 |
| 2" | 55 | 65,5 | | | | | | | | 0,48 |
| 2 1/2" | 63 | 81 | | | | | | | | 1,20 |
| 3" | 69 | 95 | | | | | | | | 1,57 |
| 4" | 80 | 114,6 | | | | | | | | 2,40 |

## Welding male ISO
Anschweißgewindestutzen ISO

**21010** — **ISO** — **Dimensions** • Baumaße

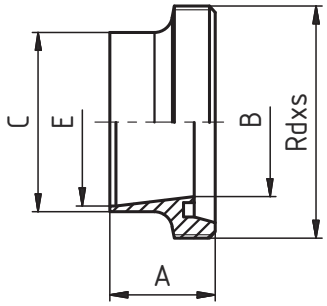


| DN | A | B | C | D | E | F | R | L | thread DIN 405 Rd x s | kg |
|---|---|---|---|---|---|---|---|---|---|---|
| 10 | 21 | 10 | 18 | | 14 | | | 4 | 28x1/8" | 0,04 |
| 15 | 21 | 16 | 21,3 | | 18,1 | | | 4 | 34x1/8" | 0,05 |
| 20 | 24 | 20 | 26,9 | | 23,7 | | | 6 | 44x1/6" | 0,10 |
| 25 | 29 | 26 | 33,7 | | 29,7 | | | 7 | 52x1/6" | 0,13 |
| 32 | 32 | 32 | 42,4 | | 38,4 | | | 7 | 58x1/6" | 0,16 |
| 40 | 33 | 38 | 48,3 | | 44,3 | | | 7 | 65x1/6" | 0,21 |
| 50 | 35 | 50 | 60,3 | | 56,3 | | | 7 | 78x1/6" | 0,30 |
| 65 | 40 | 66 | 76,1 | | 71,5 | | | 8 | 95x1/6" | 0,45 |
| 80 | 45 | 81 | 88,9 | | 84,3 | | | 8 | 110x1/4" | 0,60 |
| 100 | 54 | 100 | 114,3 | | 109,1 | | | 10 | 130x1/4" | 0,78 |

## Welding liner ISO
Anschweißkegelstutzen ISO

**21020** — **ISO** — **Dimensions** • Baumaße

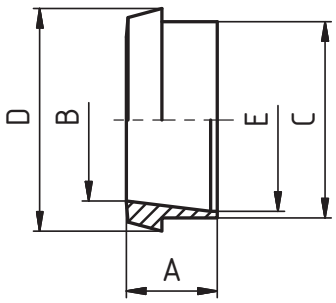


| DN | A | B | C | D | E | F | R | L | thread DIN 405 Rd x s | kg |
|---|---|---|---|---|---|---|---|---|---|---|
| 10 | 17 | 10 | 18 | 22,5 | 14 | | | | | 0,02 |
| 15 | 17 | 16 | 21,3 | 28,5 | 18,1 | | | | | 0,03 |
| 20 | 18 | 20 | 26,9 | 36,5 | 23,7 | | | | | 0,06 |
| 25 | 22 | 26 | 33,7 | 44 | 29,7 | | | | | 0,09 |
| 32 | 25 | 32 | 42,4 | 50 | 38,4 | | | | | 0,11 |
| 40 | 26 | 38 | 48,3 | 56 | 44,3 | | | | | 0,14 |
| 50 | 28 | 50 | 60,3 | 68,5 | 56,3 | | | | | 0,21 |
| 65 | 32 | 66 | 76,1 | 86 | 71,5 | | | | | 0,32 |
| 80 | 37 | 81 | 88,9 | 100 | 84,3 | | | | | 0,39 |
| 100 | 44 | 100 | 114,3 | 121 | 109,1 | | | | | 0,59 |

## Welding union - complete ISO
Anschweißverschraubung - komplett ISO

**21030** — **ISO** — **Dimensions** • Baumaße

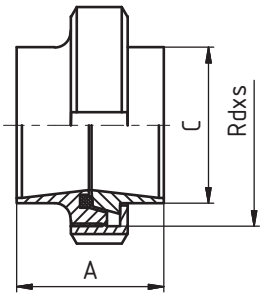


| DN | A | B | C | D | E | F | R | L | thread DIN 405 Rd x s | kg |
|---|---|---|---|---|---|---|---|---|---|---|
| 10 | 34 | | 18 | | | | | | 28x1/8" | 0,15 |
| 15 | 34 | | 21,3 | | | | | | 34x1/8" | 0,18 |
| 20 | 36 | | 26,9 | | | | | | 44x1/6" | 0,30 |
| 25 | 45 | | 33,7 | | | | | | 52x1/6" | 0,42 |
| 32 | 51 | | 42,4 | | | | | | 58x1/6" | 0,51 |
| 40 | 53 | | 48,3 | | | | | | 65x1/6" | 0,61 |
| 50 | 57 | | 60,3 | | | | | | 78x1/6" | 0,84 |
| 65 | 65 | | 76,1 | | | | | | 95x1/6" | 1,31 |
| 80 | 75 | | 88,9 | | | | | | 110x1/4" | 1,80 |
| 100 | 89 | | 114,3 | | | | | | 130x1/4" | 2,66 |

## Nut SMS
Nutmutter SMS

**21080** — **SMS**

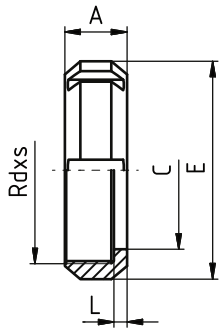


**Dimensions** • Baumaße

| DN | A | B | C | D | E | F | L | thread DIN 405 Rd x s | kg |
|---|---|---|---|---|---|---|---|---|---|
| **25** | 19 | | 32 | | 51 | | 4 | 40 x 1/6" | 0,11 |
| **38** | 23 | | 48 | | 74 | | 4 | 60 x 1/6" | 0,26 |
| **51** | 24 | | 60,5 | | 84 | | 5 | 70 x 1/6" | 0,31 |
| **63,5** | 28 | | 74 | | 100 | | 5 | 85 x 1/6" | 0,41 |
| **76** | 30 | | 87 | | 114 | | 6 | 98 x 1/6" | 0,57 |
| **101,6 / 104** | 31 | | 113 | | 138 | | 5 | 125 x 1/4" | 1,20 |

## Gasket SMS
Dichtung SMS

**21090** — **SMS**

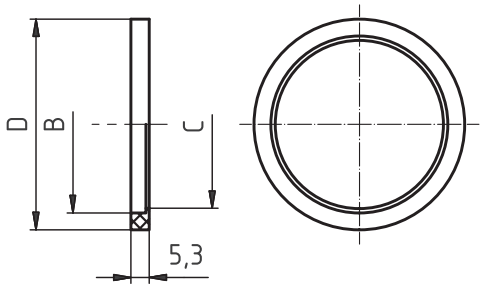


**Dimensions** • Baumaße

| DN | A | B | C | D | E | F | R | L | thread DIN 405 Rd x s | kg |
|---|---|---|---|---|---|---|---|---|---|---|
| **25** | | 25,1 | 22,8 | 31,8 | | | | | | |
| **38** | | 38,1 | 35,8 | 47,8 | | | | | | |
| **51** | | 51,1 | 48,8 | 60,8 | | | | | | |
| **63,5** | | 63,6 | 61 | 73,3 | | | | | | |
| **76** | | 76,1 | 73,4 | 85,8 | | | | | | |
| **104** | | 104 | 100,5 | 115,7 | | | | | | |

## Welding male SMS
Anschweißgewindestutzen SMS

**21100** — **SMS**

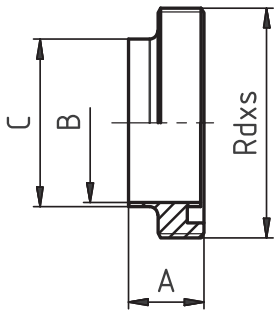


**Dimensions** • Baumaße

| DN | A | B | C | D | E | F | R | L | thread DIN 405 Rd x s | kg |
|---|---|---|---|---|---|---|---|---|---|---|
| **25** | 19 | 22,5 | 25 | | | | | | 40x1/6 | 0,05 |
| **38** | 23 | 35,5 | 38 | | | | | | 60x1/6 | 0,17 |
| **51** | 23 | 48,5 | 51 | | | | | | 70x1/6 | 0,18 |
| **63,5** | 27 | 60,5 | 63,5 | | | | | | 85x1/6 | 0,35 |
| **76** | 27 | 72,9 | 76,1 | | | | | | 98x1/6 | 0,44 |
| **101,6** | 30 | 97,6 | 101,6 | | | | | | 125x1/4 | 1,31 |
| **104** | 30 | 100 | 104 | | | | | | 125x1/4 | 1,32 |

## Welding liner SMS
Anschweißkegelstutzen SMS

**21110** — **SMS**

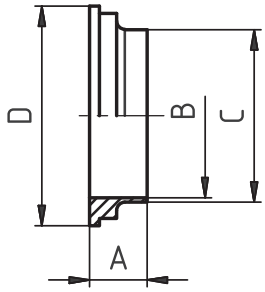


**Dimensions** • Baumaße

| DN | A | B | C | D | E | F | R | L | thread DIN 405 Rd x s | kg |
|---|---|---|---|---|---|---|---|---|---|---|
| **25** | 15,5 | 22,5 | 25 | 35,5 | | | | | | 0,02 |
| **38** | 16 | 35,5 | 38 | 55 | | | | | | 0,04 |
| **51** | 17 | 48,5 | 51 | 65 | | | | | | 0,06 |
| **63,5** | 17 | 60,5 | 63,5 | 80 | | | | | | 0,08 |
| **76** | 19 | 72,9 | 76,1 | 93 | | | | | | 0,12 |
| **101,6** | 19 | 97,6 | 101,6 | 118 | | | | | | 0,27 |
| **104** | 19 | 100 | 104 | 118 | | | | | | 0,29 |

## Gasket for SMS blind nuts
Dichtung für SMS-Blindmuttern

**21170** — **DIN 11 851**

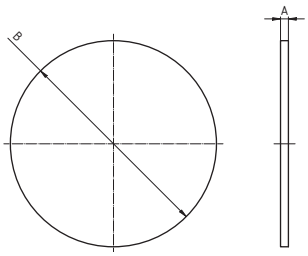


**Dimensions** • Baumaße

| DN | A | B | C | D | E | F | R | L | thread DIN 405 Rd x s | kg |
|---|---|---|---|---|---|---|---|---|---|---|
| **25** | 3 | 39 | | | | | | | | |
| **38** | 3 | 58 | | | | | | | | |
| **51** | 3 | 68 | | | | | | | | |
| **63,5** | 3 | 84 | | | | | | | | |
| **76** | 3 | 97 | | | | | | | | |
| **101,6** | 3 | 125 | | | | | | | | |
| **104** | 3 | 130 | | | | | | | | |

## Blind nut SMS
Blindmutter SMS

**21180** — **DIN 11 851**

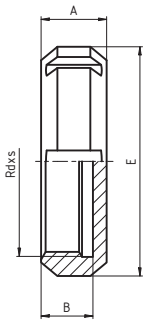


**Dimensions** • Baumaße

| DN | A | B | C | D | E | F | R | L | thread DIN 405 Rd x s | kg |
|---|---|---|---|---|---|---|---|---|---|---|
| **25** | 19 | 15 | | | 51 | | | | 40x1/6 | |
| **38** | 23 | 19 | | | 74 | | | | 60x1/6 | |
| **51** | 24 | 19 | | | 84 | | | | 70x1/6 | |
| **63,5** | 28 | 23 | | | 100 | | | | 85x1/6 | |
| **76** | 30 | 24 | | | 114 | | | | 98x1/6 | |
| **101,6** | 31 | 26 | | | 138 | | | | 124x1/4 | |

## Blind nut SMS with chain
Blindmutter SMS mit Kette

**21190** — **DIN 11 851**

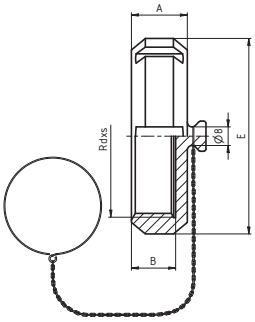


**Dimensions** • Baumaße

| DN | A | B | C | D | E | F | R | L | thread DIN 405 Rd x s | kg |
|---|---|---|---|---|---|---|---|---|---|---|
| **25** | 19 | 15 | | | 51 | | | | 40x1/6 | |
| **38** | 23 | 19 | | | 74 | | | | 60x1/6 | |
| **51** | 24 | 19 | | | 84 | | | | 70x1/6 | |
| **63,5** | 28 | 23 | | | 100 | | | | 85x1/6 | |
| **76** | 30 | 24 | | | 114 | | | | 98x1/6 | |
| **101,6** | 31 | 26 | | | 138 | | | | 124x1/4 | |

## Clamp ferrule - S
TC-Klemmstutzen - S

**21200** — **DIN 32 676**

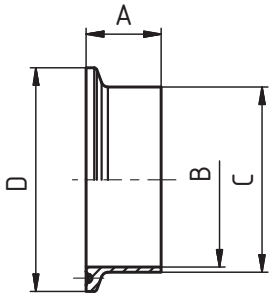


**Dimensions** • Baumaße

| DN | A | B | C | D | E | F | R | L | thread DIN 405 Rd x s | kg |
|---|---|---|---|---|---|---|---|---|---|---|
| **10** | 18 | 10 | 13 | 34 | | | | | | 0,03 |
| **15** | 18 | 16 | 19 | 34 | | | | | | 0,03 |
| **20** | 18 | 20 | 23 | 34 | | | | | | 0,03 |
| **25** | 21,5 | 26 | 29 | 50,5 | | | | | | 0,07 |
| **32** | 21,5 | 32 | 35 | 50,5 | | | | | | 0,07 |
| **40** | 21,5 | 38 | 41 | 50,5 | | | | | | 0,07 |
| **50** | 21,5 | 50 | 53 | 64 | | | | | | 0,07 |
| **65** | 28 | 66 | 70 | 91 | | | | | | 0,10 |
| **80** | 28 | 81 | 85 | 106 | | | | | | 0,20 |
| **100** | 28 | 100 | 104 | 119 | | | | | | 0,22 |
| **125** | 28 | 125 | 129 | 155 | | | | | | 0,52 |
| **150** | 28 | 150 | 154 | 183 | | | | | | 0,70 |

## Clamp ferrule - S SMS
TC-Klemmstutzen - S SMS

**21202** — **SMS**

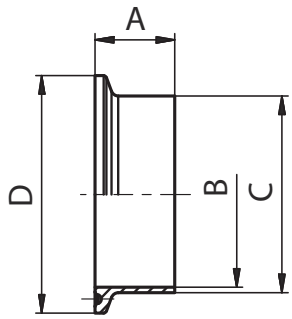


**Dimensions • Baumaße**

| DN - SMS | A | B | C | D | F | R | L | thread DIN 405 Rd x s | kg |
|---|---|---|---|---|---|---|---|---|---|
| 1/2" - 12,7 | 21,5 | 9,4 | 12,7 | 25 | | | | | 0,03 |
| 1/2" - 12,7 | 28,6 | 9,4 | 12,7 | 25 | | | | | 0,03 |
| 3/4" - 19,05 | 21,5 | 15,75 | 19,05 | 25 | | | | | 0,03 |
| 3/4" - 19,05 | 28,6 | 15,75 | 19,05 | 25 | | | | | 0,03 |
| 1" - 25,4 | 21,5 | 22,1 | 25,4 | 50,5 | | | | | 0,07 |
| 1" - 25,4 | 28,6 | 22,1 | 25,4 | 50,5 | | | | | 0,07 |
| 1 1/2" - 38,1 | 28 | 35,5 | 38,1 | 50,5 | | | | | 0,07 |
| 2" - 51 | 28 | 48,5 | 51 | 64 | | | | | 0,07 |
| 2 1/2" - 63,5 | 28 | 60,5 | 63,5 | 77,5 | | | | | 0,1 |
| 3" - 76,1 | 28 | 72,9 | 76,1 | 91 | | | | | 0,2 |
| 4" - 101,6 | 28 | 97,6 | 101,6 | 119 | | | | | 0,22 |

## Clamp SMS
TC-Klammer leichte Ausführung SMS

**21220** — **DIN 32 676**

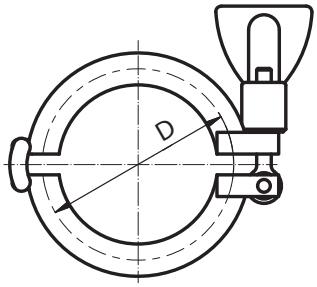


**Dimensions** • Baumaße

| DN | SMS | DIN | D |
|---|---|---|---|
| 1/2"-3/4" | 12,7 | - | 25 |
| 1/2"-3/4" | 19,05 | - | 25 |
| 10-20 | - | 10-20 | 34 |
| 1"-1 1/2" | 25 | 25 | 50,5 |
| 1"-1 1/2" | - | 32 | 50,5 |
| 1"-1 1/2" | 38 | 40 | 50,5 |
| 2" | 51 | 50 | 64 |
| 2 1/2" | 63,5 | - | 77,5 |
| 3" | 76,1 | 65 | 91 |
| 80 | - | 80 | 106 |
| 4" | 101,6 | 100 | 119 |

| DN | SMS | DIN | D |
|---|---|---|---|
| 125 | - | 125 | 155 |
| 6" | - | - | 166,8 |
| 150 | - | 150 | 183 |
| 8" | - | - | 217,6 |
| 200 | - | 200 | 233,5 |
| 250 | - | 250 | 268 |
| 300 | - | 300 | 318,5 |

## Clamp gasket
Clamp Dichtung

**21230** — **DIN 32 676**

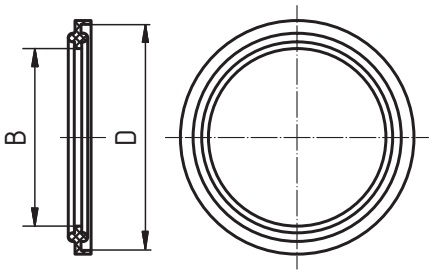


**Dimensions** • Baumaße

| DN | A | B | C | D | E | F | R | L | thread DIN 405 Rd x s | kg |
|---|---|---|---|---|---|---|---|---|---|---|
| 10 | | 10,2 | | 34 | | | | | | |
| 15 | | 16,2 | | 34 | | | | | | |
| 20 | | 20,2 | | 34 | | | | | | |
| 25 | | 26,2 | | 50,5 | | | | | | |
| 32 | | 32,2 | | 50,5 | | | | | | |
| 40 | | 38,2 | | 50,5 | | | | | | |
| 50 | | 50,2 | | 64 | | | | | | |
| 65 | | 66,2 | | 91 | | | | | | |
| 80 | | 81,2 | | 106 | | | | | | |
| 100 | | 100,2 | | 119 | | | | | | |

## Clamp gasket SMS
Clamp Dichtung SMS

**21232** — **SMS**

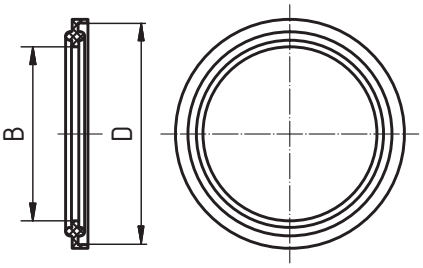


**Dimensions** • Baumaße

| DN - SMS | B | D | | E | F | R | L | thread DIN 405 Rd x s | kg |
|---|---|---|---|---|---|---|---|---|---|
| 1/2" - 12,7 | 9,3 | 25 | | | | | | | |
| 3/4" - 19,05 | 15,7 | 25 | | | | | | | |
| 1" - 25 | 22,3 | 50,5 | | | | | | | |
| 1 1/2" - 38,1 | 35 | 50,5 | | | | | | | |
| 2" - 51 | 47,7 | 64 | | | | | | | |
| 2 1/2" - 63,5 | 60,4 | 77,5 | | | | | | | |
| 3" - 76,1 | 73,1 | 91 | | | | | | | |
| 4" - 101,6 | 97,6 | 119 | | | | | | | |

## Clamp blank
TC-Blindklemmstutzen

**21240** — **DIN 32 676**

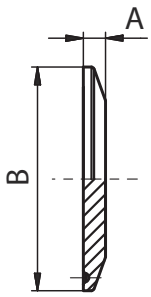


**Dimensions** • Baumaße

| DN | A | B | C | D | E | F | R | L | thread DIN 405 Rd x s | kg |
|---|---|---|---|---|---|---|---|---|---|---|
| **10** | 6,35 | 34 | | | | | | | | 0,04 |
| **15** | 6,35 | 34 | | | | | | | | 0,04 |
| **20** | 6,35 | 34 | | | | | | | | 0,04 |
| **25** | 6,35 | 50,5 | | | | | | | | 0,08 |
| **32** | 6,35 | 50,5 | | | | | | | | 0,08 |
| **40** | 6,35 | 50,5 | | | | | | | | 0,08 |
| **50** | 6,35 | 64 | | | | | | | | 0,14 |
| **65** | 6,35 | 91 | | | | | | | | 0,28 |
| **80** | 6,35 | 106 | | | | | | | | 0,46 |
| **100** | 7,95 | 119 | | | | | | | | 0,60 |
| **125** | 7,95 | 155 | | | | | | | | 1,15 |
| **150** | 11,00 | 183 | | | | | | | | 2,20 |

## Clamp blank DIN/SMS
TC-Blindklemmstutzen DIN/SMS

**21242** — **SMS**

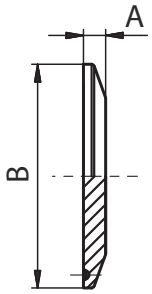


**Dimensions** • Baumaße

| DN - SMS | A | B | C | E | F | R | L | thread DIN 405 Rd x s | kg |
|---|---|---|---|---|---|---|---|---|---|
| **1/2" - 12,7** | 6,35 | 25 | | | | | | | 0,04 |
| **3/4" - 19,05** | 6,35 | 25 | | | | | | | 0,04 |
| **1" - 25** | 6,35 | 50,5 | | | | | | | 0,08 |
| **1 1/2" - 38,1** | 6,35 | 50,5 | | | | | | | 0,08 |
| **2" - 51** | 6,35 | 64 | | | | | | | 0,14 |
| **2 1/2" - 63,5** | 6,35 | 77,5 | | | | | | | 0,28 |
| **3" - 76,1** | 6,35 | 91 | | | | | | | 0,46 |
| **4" - 101,6** | 7,95 | 119 | | | | | | | 0,6 |

## Clamp union - S - DIN - complete
Clampverbindung - S - DIN - komplett

**21250** — **DIN 32 676**

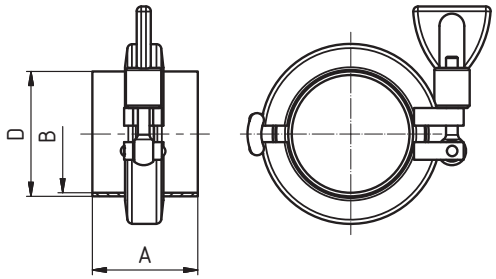


**Dimensions** • Baumaße

| DN | A | B | C | D | E | F | R | L | thread DIN 405 Rd x s | kg |
|---|---|---|---|---|---|---|---|---|---|---|
| **10** | 45 | 10 | | 13 | | | | | | 0,28 |
| **15** | 45 | 16 | | 19 | | | | | | 0,28 |
| **20** | 45 | 20 | | 23 | | | | | | 0,30 |
| **25** | 45 | 26 | | 29 | | | | | | 0,35 |
| **32** | 45 | 32 | | 35 | | | | | | 0,35 |
| **40** | 45 | 38 | | 41 | | | | | | 0,37 |
| **50** | 45 | 50 | | 53 | | | | | | 0,39 |
| **65** | 58 | 66 | | 70 | | | | | | 0,89 |
| **80** | 58 | 81 | | 85 | | | | | | 0,95 |
| **100** | 58 | 100 | | 104 | | | | | | 0,99 |
| **125** | 58 | 125 | | 129 | | | | | | 1,15 |
| **150** | 58 | 150 | | 154 | | | | | | 1,30 |

## Clamp union - S - SMS - complete
Clampverbindung - S - SMS - komplett

**21252** — **SMS**

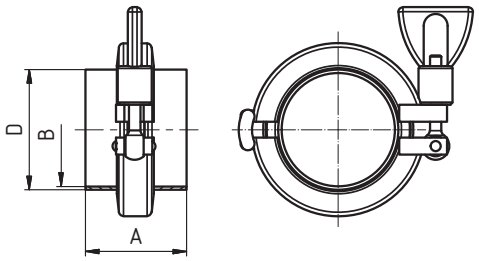


**Dimensions** • Baumaße

| DN | A | B | C | D | E | F | R | L | thread DIN 405 Rd x s | kg |
|---|---|---|---|---|---|---|---|---|---|---|
| **25** | 43 | 22,5 | | 25 | | | | | | 0,35 |
| **38** | 43 | 35,5 | | 38,1 | | | | | | 0,37 |
| **51** | 43 | 48,5 | | 51 | | | | | | 0,39 |
| **63,5** | 56 | 60,5 | | 63,5 | | | | | | 0,89 |
| **76** | 56 | 72,9 | | 76,1 | | | | | | 0,95 |
| **101,6** | 56 | 97,6 | | 101,6 | | | | | | 0,99 |

## Welding male
Anschweißgewindestutzen

**22300**
**DIN 11 853**

Welding union 22320, DIN 11 853-1
Anschweißverschraubung 22320, DIN 11 853-1

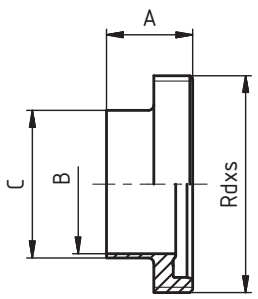


| DN | A | B | C | D | E | F | R | L | závit DIN 405 Rd x s | kg |
|---|---|---|---|---|---|---|---|---|---|---|
| **10** | 19 | 10 | 13 | | | | | | 28 x 1/8" | 0,04 |
| **15** | 19 | 16 | 19 | | | | | | 34 x 1/8" | 0,06 |
| **20** | 21 | 20 | 23 | | | | | | 44 x 1/6" | 0,11 |
| **25** | 26 | 26 | 29 | | | | | | 52 x 1/6" | 0,15 |
| **32** | 30 | 32 | 35 | | | | | | 58 x 1/6" | 0,17 |
| **40** | 31 | 38 | 41 | | | | | | 65 x 1/6" | 0,20 |
| **50** | 31 | 50 | 53 | | | | | | 78 x 1/6" | 0,26 |
| **65** | 36 | 66 | 70 | | | | | | 95 x 1/6" | 0,40 |
| **80** | 42 | 81 | 85 | | | | | | 110 x 1/4" | 0,63 |
| **100** | 50 | 100 | 104 | | | | | | 130 x 1/4" | 0,76 |

## Welding liner
Anschweißkegelstutzen

**22310**
**DIN 11 853**

Welding union 22320, DIN 11 853-1
Anschweißverschraubung 22320, DIN 11 853-1

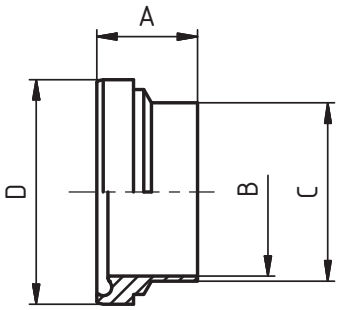


| DN | A | B | C | D | E | F | R | | závit DIN 405 Rd x s | kg |
|---|---|---|---|---|---|---|---|---|---|---|
| **10** | 17 | 10 | 13 | 21,9 | | | | | | 0,02 |
| **15** | 17 | 16 | 19 | 27,9 | | | | | | 0,03 |
| **20** | 18 | 20 | 23 | 35,9 | | | | | | 0,05 |
| **25** | 22 | 26 | 29 | 42,9 | | | | | | 0,08 |
| **32** | 25 | 32 | 35 | 48,9 | | | | | | 0,09 |
| **40** | 26 | 38 | 41 | 54,9 | | | | | | 0,11 |
| **50** | 30 | 50 | 53 | 66,9 | | | | | | 0,16 |
| **65** | 34 | 66 | 70 | 84,9 | | | | | | 0,30 |
| **80** | 38 | 81 | 85 | 98,9 | | | | | | 0,35 |
| **100** | 46 | 100 | 104 | 118,9 | | | | | | 0,57 |

## Welding union - complete
Anschweißverschraubung - komplett

**22320**
**DIN 11 853**

Welding union 22320, DIN 11 853-1
Anschweißverschraubung 22320, DIN 11 853-1

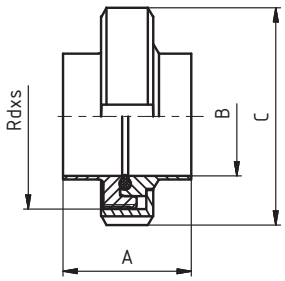


| DN | A | B | C | D | E | F | R | L | závit DIN 405 Rd x s | kg |
|---|---|---|---|---|---|---|---|---|---|---|
| **10** | 32 | 10 | 38 | | | | | | 28 x 1/8" | 0,14 |
| **15** | 32 | 16 | 44 | | | | | | 34 x 1/8" | 0,18 |
| **20** | 34 | 20 | 54 | | | | | | 44 x 1/6" | 0,30 |
| **25** | 42 | 26 | 63 | | | | | | 52 x 1/6" | 0,41 |
| **32** | 48 | 32 | 70 | | | | | | 58 x 1/6" | 0,48 |
| **40** | 50 | 38 | 78 | | | | | | 65 x 1/6" | 0,57 |
| **50** | 54 | 50 | 92 | | | | | | 78 x 1/6" | 0,78 |
| **65** | 62 | 66 | 112 | | | | | | 95 x 1/6" | 1,27 |
| **80** | 72 | 81 | 127 | | | | | | 110 x 1/4" | 1,76 |
| **100** | 86 | 100 | 148 | | | | | | 130 x 1/4" | 2,40 |

## Gasket
Dichtung

**72020**
**DIN 11 853**

**Dimensions** • Baumaße

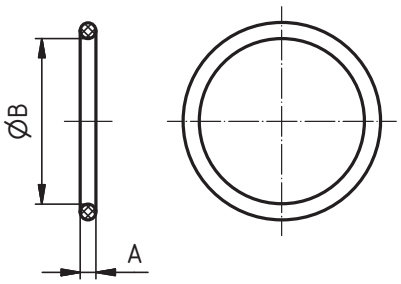


| DN | A | B | C | D | E | F | R | L | thread DIN 405 Rd x s | kg |
|---|---|---|---|---|---|---|---|---|---|---|
| **10** | 3,5 | 12 | | | | | | | | |
| **15** | 3,5 | 18 | | | | | | | | |
| **20** | 3,5 | 22 | | | | | | | | |
| **25** | 3,5 | 28 | | | | | | | | |
| **32** | 5 | 34 | | | | | | | | |
| **40** | 5 | 40 | | | | | | | | |
| **50** | 5 | 52 | | | | | | | | |
| **65** | 5 | 68 | | | | | | | | |
| **80** | 5 | 83 | | | | | | | | |
| **100** | 5 | 102 | | | | | | | | |

## Welding male
Anschweißgewindestutzen

**22460**

**DIN 11 864-1-A**

Welding union 22490, DIN 11 864-1
Anschweißverschraubung 22490, DIN 11 864-1

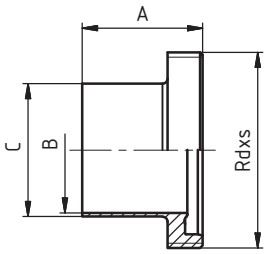


| DN | A | B | C | D | E | F | R | L | thread DIN 405 Rd x s | kg |
|---|---|---|---|---|---|---|---|---|---|---|
| **10** | 41 | 10 | 13 | | | | | | 28 x 1/8" | 0,05 |
| **15** | 41 | 16 | 19 | | | | | | 34 x 1/8" | 0,07 |
| **20** | 43 | 20 | 23 | | | | | | 44 x 1/6" | 0,13 |
| **25** | 43 | 26 | 29 | | | | | | 52 x 1/6" | 0,16 |
| **32** | 48 | 32 | 35 | | | | | | 58 x 1/6" | 0,19 |
| **40** | 48 | 38 | 41 | | | | | | 65 x 1/6" | 0,22 |
| **50** | 48 | 50 | 53 | | | | | | 78 x 1/6" | 0,30 |
| **65** | 60 | 66 | 70 | | | | | | 95 x 1/6" | 0,48 |
| **80** | 64 | 81 | 85 | | | | | | 110 x 1/4" | 0,72 |
| **100** | 64 | 100 | 104 | | | | | | 130 x 1/4" | 0,84 |

## Welding liner
Anschweißkegelstutzen

**22470**

**DIN 11 864-1-A**

Welding union 22490, DIN 11 864-1
Anschweißverschraubung 22490, DIN 11 864-1

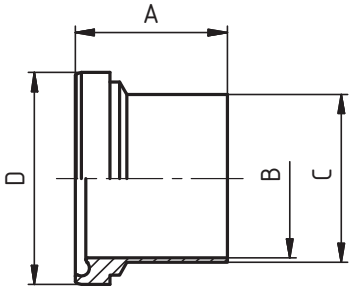


| DN | A | B | C | D | E | F | R | L | thread DIN 405 Rd x s | kg |
|---|---|---|---|---|---|---|---|---|---|---|
| **10** | 39 | 10 | 13 | 21,9 | | | | | | 0,03 |
| **15** | 39 | 16 | 19 | 27,9 | | | | | | 0,04 |
| **20** | 38 | 20 | 23 | 35,9 | | | | | | 0,06 |
| **25** | 40 | 26 | 29 | 42,9 | | | | | | 0,10 |
| **32** | 47 | 32 | 35 | 48,9 | | | | | | 0,12 |
| **40** | 47 | 38 | 41 | 54,9 | | | | | | 0,14 |
| **50** | 48 | 50 | 53 | 66,9 | | | | | | 0,20 |
| **65** | 61 | 66 | 70 | 84,9 | | | | | | 0,38 |
| **80** | 61 | 81 | 85 | 98,9 | | | | | | 0,44 |
| **100** | 66 | 100 | 104 | 118,9 | | | | | | 0,67 |

## Welding union - complete
Anschweißverschraubung - komplett

**22490**

**DIN 11 864-1-A**

Welding union 22490, DIN 11 864-1
Anschweißverschraubung 22490, DIN 11 864-1

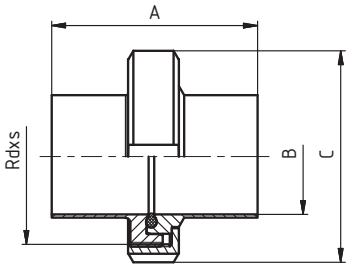


| DN | A | B | C | D | E | F | R | L | thread DIN 405 Rd x s | kg |
|---|---|---|---|---|---|---|---|---|---|---|
| **10** | 76 | 10 | 38 | | | | | | 28x1/8" | 0,08 |
| **15** | 76 | 16 | 44 | | | | | | 34x1/8" | 0,11 |
| **20** | 76 | 20 | 54 | | | | | | 44x1/6" | 0,19 |
| **25** | 77 | 26 | 63 | | | | | | 52x1/6" | 0,26 |
| **32** | 88 | 32 | 70 | | | | | | 58x1/6" | 0,31 |
| **40** | 88 | 38 | 78 | | | | | | 65x1/6" | 0,36 |
| **50** | 89 | 50 | 92 | | | | | | 78x1/6" | 0,50 |
| **65** | 113 | 66 | 112 | | | | | | 95x1/6" | 0,86 |
| **80** | 117 | 81 | 127 | | | | | | 110x1/4" | 1,16 |
| **100** | 120 | 100 | 148 | | | | | | 130x1/4" | 1,51 |

## Hygienic flange "BF"
Hygiene Bundflansch "BF"

**22850 (BF)**

**DIN 11 853**

Hygienic flange connection PN10 DIN 11853
Hygiene flanschverbindung PN 10 DIN 11853

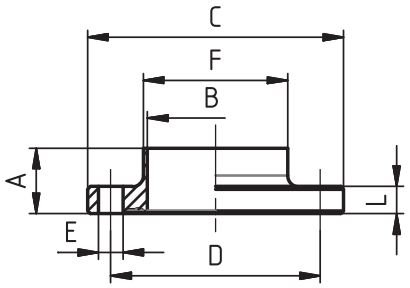


| DN | A | B | C | D | E | F | R | L | závit DIN 405 Rd x s | kg |
|---|---|---|---|---|---|---|---|---|---|---|
| **10** | 24 | 10 | 54 | 37 | 9x4 | 13 | | 10 | | 0,16 |
| **15** | 24 | 16 | 59 | 42 | 9x4 | 19 | | 10 | | 0,18 |
| **20** | 24 | 20 | 64 | 47 | 9x4 | 23 | | 10 | | 0,21 |
| **25** | 24 | 26 | 70 | 53 | 9x4 | 29 | | 10 | | 0,25 |
| **32** | 24 | 32 | 76 | 59 | 9x4 | 35 | | 10 | | 0,28 |
| **40** | 24 | 38 | 82 | 65 | 9x4 | 41 | | 10 | | 0,32 |
| **50** | 24 | 50 | 94 | 77 | 9x4 | 53 | | 10 | | 0,39 |
| **65** | 24 | 66 | 113 | 95 | 9x8 | 70 | | 10 | | 0,52 |
| **80** | 26 | 81 | 133 | 112 | 11x8 | 85 | | 12 | | 0,80 |
| **100** | 26 | 100 | 159 | 137 | 11x8 | 104 | | 14 | | 1,29 |
| **125** | 28 | 125 | 183 | 161 | 11x8 | 129 | | 14 | | 1,54 |
| **150** | 28 | 150 | 213 | 188 | 14x8 | 154 | | 16 | | 2,19 |

## Hygienic flange "NF"
Hygiene Bundflansch "NF"

**22860 (NF)**

**DIN 11 853**

Hygienic flange connection PN10 DIN 11853
Hygiene flanschverbindung PN 10 DIN 11853

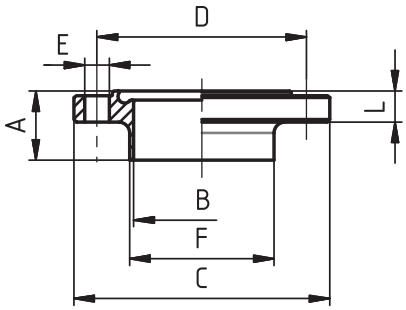


| DN | A | B | C | D | E | F | R | L | závit DIN 405 Rd x s | kg |
|---|---|---|---|---|---|---|---|---|---|---|
| **10** | 25,5 | 10 | 54 | 37 | 9x4 | 13 | | 11,5 | | 0,16 |
| **15** | 25,5 | 16 | 59 | 42 | 9x4 | 19 | | 11,5 | | 0,18 |
| **20** | 25,5 | 20 | 64 | 47 | 9x4 | 23 | | 11,5 | | 0,21 |
| **25** | 25,5 | 26 | 70 | 53 | 9x4 | 29 | | 11,5 | | 0,25 |
| **32** | 25,5 | 32 | 76 | 59 | 9x4 | 35 | | 11,5 | | 0,28 |
| **40** | 25,5 | 38 | 82 | 65 | 9x4 | 41 | | 11,5 | | 0,32 |
| **50** | 25,5 | 50 | 94 | 77 | 9x4 | 53 | | 11,5 | | 0,39 |
| **65** | 25,5 | 66 | 113 | 95 | 9x8 | 70 | | 11,5 | | 0,52 |
| **80** | 27,5 | 81 | 133 | 112 | 11x8 | 85 | | 13,5 | | 0,80 |
| **100** | 27,5 | 100 | 159 | 137 | 11x8 | 104 | | 15,5 | | 1,29 |
| **125** | 29,5 | 125 | 183 | 161 | 11x8 | 129 | | 15,5 | | 1,54 |
| **150** | 29,5 | 150 | 213 | 188 | 14x8 | 154 | | 17,5 | | 2,19 |

## Hygienic flange connection PN10 - complete
Hygiene flanschverbindung PN 10 - komplett

**22870**

**DIN 11 853**

Hygienic flange connection PN10 DIN 11853
Hygiene flanschverbindung PN 10 DIN 11853

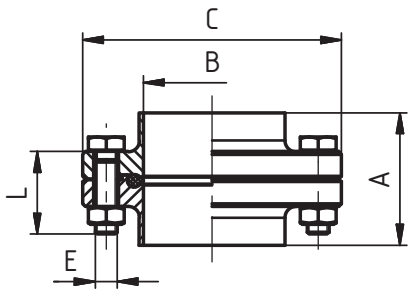


| DN | A | B | C | D | E | F | R | L | závit DIN 405 Rd x s | kg |
|---|---|---|---|---|---|---|---|---|---|---|
| **10** | 48 | 10 | 54 | | 4 x M8 | | | 28 | | 0,41 |
| **15** | 48 | 16 | 59 | | 4 x M8 | | | 28 | | 0,46 |
| **20** | 48 | 20 | 64 | | 4 x M8 | | | 28 | | 0,52 |
| **25** | 48 | 26 | 70 | | 4 x M8 | | | 28 | | 0,60 |
| **32** | 48 | 32 | 76 | | 4 x M8 | | | 28 | | 0,66 |
| **40** | 48 | 38 | 82 | | 4 x M8 | | | 28 | | 0,73 |
| **50** | 48 | 50 | 94 | | 4 x M8 | | | 28 | | 0,87 |
| **65** | 48 | 66 | 113 | | 8 x M8 | | | 28 | | 1,21 |
| **80** | 52 | 81 | 133 | | 8 x M10 | | | 35 | | 1,96 |
| **100** | 52 | 100 | 159 | | 8 x M10 | | | 40 | | 2,97 |
| **125** | 56 | 125 | 183 | | 8 x M10 | | | 40 | | 3,47 |
| **150** | 56 | 150 | 213 | | 8 x M12 | | | 45 | | 5,02 |

Welding aseptic flange "NF"
Aseptic Bundflansch "NF"

**22910 (BF)**

**DIN 11 864-2-A**

Aseptic flange connection PN 10 DIN 11864
Aseptic flanschverbindung PN 10 DIN 11864

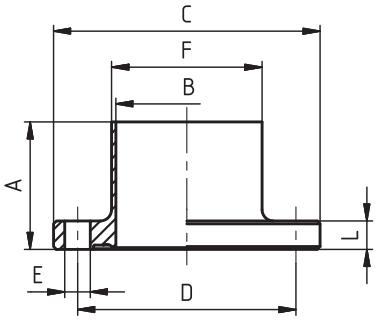


| DN | A | B | C | D | E | F | R | L | závit DIN 405 Rd x s | kg |
|---|---|---|---|---|---|---|---|---|---|---|
| **10** | 40 | 10 | 54 | 37 | 9x4 | 13 | | 10 | | 0,16 |
| **15** | 40 | 16 | 59 | 42 | 9x4 | 19 | | 10 | | 0,18 |
| **20** | 40 | 20 | 64 | 47 | 9x4 | 23 | | 10 | | 0,21 |
| **25** | 40 | 26 | 70 | 53 | 9x4 | 29 | | 10 | | 0,25 |
| **32** | 45 | 32 | 76 | 59 | 9x4 | 35 | | 10 | | 0,28 |
| **40** | 45 | 38 | 82 | 65 | 9x4 | 41 | | 10 | | 0,32 |
| **50** | 45 | 50 | 94 | 77 | 9x4 | 53 | | 10 | | 0,39 |
| **65** | 54 | 66 | 113 | 95 | 9x8 | 70 | | 10 | | 0,52 |
| **80** | 58 | 81 | 133 | 112 | 11x8 | 85 | | 12 | | 0,80 |
| **100** | 58 | 100 | 159 | 137 | 11x8 | 104 | | 14 | | 1,29 |
| **125** | 60 | 125 | 183 | 161 | 11x8 | 129 | | 14 | | 1,54 |
| **150** | 60 | 150 | 213 | 188 | 14x8 | 154 | | 16 | | 2,19 |

Welding aseptic neck "NF"
Aseptic Bundflansch "NF"

**22920 (NF)**

**DIN 11 864-2-A**

Aseptic flange connection PN 10 DIN 11864
Aseptic flanschverbindung PN 10 DIN 11864

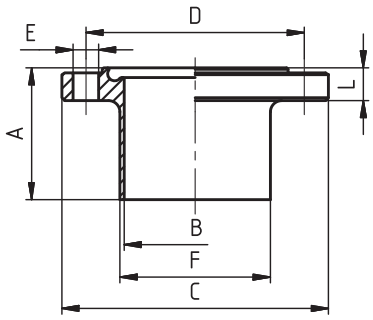


| DN | A | B | C | D | E | F | R | L | závit DIN 405 Rd x s | kg |
|---|---|---|---|---|---|---|---|---|---|---|
| **10** | 41,5 | 10 | 54 | 37 | 9x4 | 13 | | 11,5 | | 0,16 |
| **15** | 41,5 | 16 | 59 | 42 | 9x4 | 19 | | 11,5 | | 0,18 |
| **20** | 41,5 | 20 | 64 | 47 | 9x4 | 23 | | 11,5 | | 0,21 |
| **25** | 41,5 | 26 | 70 | 53 | 9x4 | 29 | | 11,5 | | 0,25 |
| **32** | 46,5 | 32 | 76 | 59 | 9x4 | 35 | | 11,5 | | 0,28 |
| **40** | 46,5 | 38 | 82 | 65 | 9x4 | 41 | | 11,5 | | 0,32 |
| **50** | 46,5 | 50 | 94 | 77 | 9x4 | 53 | | 11,5 | | 0,39 |
| **65** | 55,5 | 66 | 113 | 95 | 9x8 | 70 | | 11,5 | | 0,52 |
| **80** | 59,5 | 81 | 133 | 112 | 11x8 | 85 | | 13,5 | | 0,80 |
| **100** | 59,5 | 100 | 159 | 137 | 11x8 | 104 | | 15,5 | | 1,29 |
| **125** | 61,5 | 125 | 183 | 161 | 11x8 | 129 | | 15,5 | | 1,54 |
| **150** | 61,5 | 150 | 213 | 188 | 14x8 | 154 | | 17,5 | | 2,19 |

Aseptic flange connection PN10 - complete
Aseptic flanschverbindung PN 10 - komplett

**22930**

**DIN 11 864-2-A**

Aseptic flange connection PN 10 DIN 11864
Aseptic flanschverbindung PN 10 DIN 11864

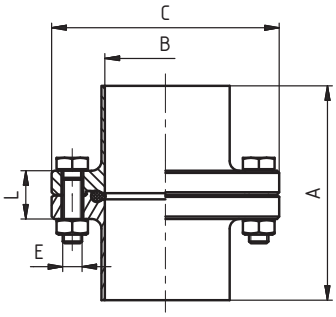


| DN | A | B | C | D | E | F | R | L | závit DIN 405 Rd x s | kg |
|---|---|---|---|---|---|---|---|---|---|---|
| **10** | 80 | 10 | 54 | | 4 x M8 | | | 28 | | |
| **15** | 80 | 16 | 59 | | 4 x M8 | | | 28 | | |
| **20** | 80 | 20 | 64 | | 4 x M8 | | | 28 | | |
| **25** | 80 | 26 | 70 | | 4 x M8 | | | 28 | | |
| **32** | 90 | 32 | 76 | | 4 x M8 | | | 28 | | |
| **40** | 90 | 38 | 82 | | 4 x M8 | | | 28 | | |
| **50** | 90 | 50 | 94 | | 4 x M8 | | | 28 | | |
| **65** | 108 | 66 | 113 | | 8 x M8 | | | 28 | | |
| **80** | 116 | 81 | 133 | | 8 x M10 | | | 35 | | |
| **100** | 116 | 100 | 159 | | 8 x M10 | | | 40 | | |
| **125** | 120 | 125 | 183 | | 8 x M10 | | | 40 | | |
| **150** | 120 | 150 | 213 | | 8 x M12 | | | 45 | | |

Clamp ferrule S (BKS)
Klampstutzen S (BKS)

**22950 (BKS)**

**DIN 11864-3**

Clamp union - S - DIN 11864-3
Clampverbindung - S - DIN 11864-3

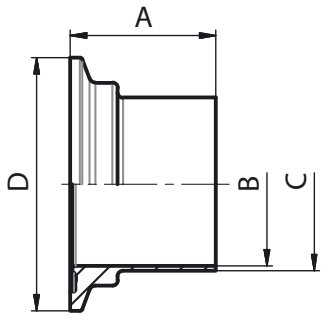


| DN | A | B | C | D | E | F | R | L | thread DIN 405 Rd x s | kg |
|---|---|---|---|---|---|---|---|---|---|---|
| **10** | 38 | 10 | 13 | 34 | | | | | | |
| **15** | 38 | 16 | 19 | 34 | | | | | | |
| **20** | 38 | 20 | 23 | 50,5 | | | | | | |
| **25** | 38,5 | 26 | 29 | 50,5 | | | | | | |
| **32** | 44 | 32 | 35 | 50,5 | | | | | | |
| **40** | 44 | 38 | 41 | 64 | | | | | | |
| **50** | 44,5 | 50 | 53 | 77,5 | | | | | | |
| **65** | 56,5 | 66 | 70 | 91 | | | | | | |
| **80** | 58,5 | 81 | 85 | 106 | | | | | | |
| **100** | 60 | 100 | 104 | 130 | | | | | | |

Clamp ferrule S (NKS)
Klampstutzen S (NKS)

**22960 (NKS)**

**DIN 11864-3**

Clamp union - S - DIN 11864-3
Clampverbindung - S - DIN 11864-3

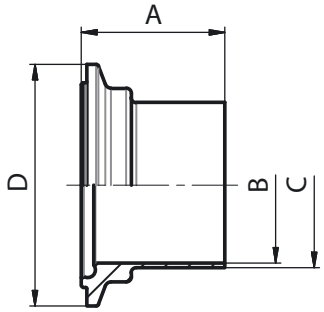


| DN | A | B | C | D | E | F | R | L | thread DIN 405 Rd x s | kg |
|---|---|---|---|---|---|---|---|---|---|---|
| **10** | 39,5 | 10 | 13 | 34 | | | | | | |
| **15** | 39,5 | 16 | 19 | 34 | | | | | | |
| **20** | 39,5 | 20 | 23 | 50,5 | | | | | | |
| **25** | 40 | 26 | 29 | 50,5 | | | | | | |
| **32** | 45,5 | 32 | 35 | 50,5 | | | | | | |
| **40** | 45,5 | 38 | 41 | 64 | | | | | | |
| **50** | 46 | 50 | 53 | 77,5 | | | | | | |
| **65** | 58 | 66 | 70 | 91 | | | | | | |
| **80** | 60 | 81 | 85 | 106 | | | | | | |
| **100** | 61,5 | 100 | 104 | 130 | | | | | | |

Clamp union S DIN 11964-3
- complete
Clampverbindungen S DIN 11864-3
- komplett

**22970**

**DIN 11864-3**

Clamp union - S - DIN 11864-3
Clampverbindung - S - DIN 11864-3

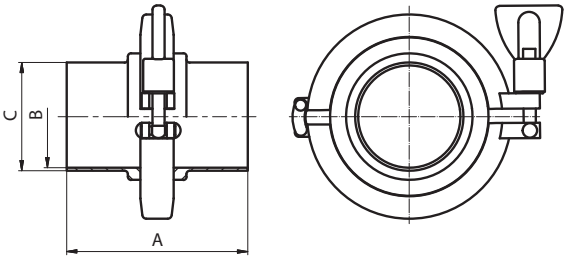


| DN | A | B | C | D | E | F | R | L | thread DIN 405 Rd x s | kg |
|---|---|---|---|---|---|---|---|---|---|---|
| **10** | 77,5 | 10 | 13 | | | | | | | |
| **15** | 77,5 | 16 | 19 | | | | | | | |
| **20** | 77,5 | 20 | 23 | | | | | | | |
| **25** | 78,5 | 26 | 29 | | | | | | | |
| **32** | 89,5 | 32 | 35 | | | | | | | |
| **40** | 89,5 | 38 | 41 | | | | | | | |
| **50** | 90,5 | 50 | 53 | | | | | | | |
| **65** | 114,5 | 66 | 70 | | | | | | | |
| **80** | 118,5 | 81 | 85 | | | | | | | |
| **100** | 121,5 | 100 | 104 | | | | | | | |

Clamp
TC-Klammer leichte Ausführung

**21220**

**Dimensions** • Baumaße

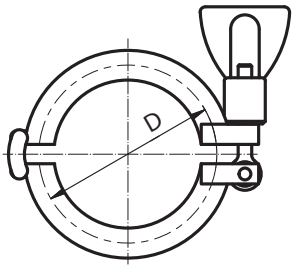


| DN | SMS | DIN | D | DIN 11864-3 | R | L | závit DIN 405 Rd x s | kg |
|---|---|---|---|---|---|---|---|---|
| **10-20** | - | 10-20 | 34 | 10-15 | | | | |
| **1"-1 1/2"** | 25 | 25 | 50,5 | 20 | | | | |
| **1"-1 1/2"** | - | 32 | 50,5 | 25 | | | | |
| **1"-1 1/2"** | 38 | 40 | 50,5 | 32 | | | | |
| **2"** | 51 | 50 | 64 | 40 | | | | |
| **2 1/2"** | 63,5 | - | 77,5 | 50 | | | | |
| **3"** | 76,1 | 65 | 91 | 65 | | | | |
| **80** | - | 80 | 106 | 80 | | | | |
| **115** | - | - | 130 | 100 | | | | |

## Long welding garolla fitting
Anschw. Garollastutzen

**23400** **Dimensions** • Baumaße

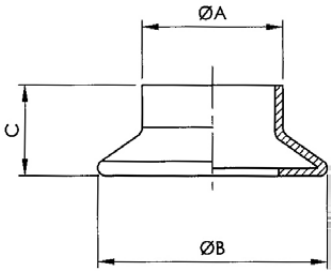


| DN | A | B | C | D | E | F | R | L | thread DIN 405 Rd x s | kg |
|---|---|---|---|---|---|---|---|---|---|---|
| **40** | 41 | 65 | 31 | | | | | | | 0,12 |
| **50** | 46 | 76 | 34 | | | | | | | 0,20 |
| **60** | 58 | 87 | 35 | | | | | | | 0,20 |
| **70** | 73 | 97 | 35 | | | | | | | 0,24 |
| **80** | 86 | 108 | 36 | | | | | | | 0,28 |
| **100** | 101 | 129 | 40 | | | | | | | |
| **120** | 124 | 158 | 46 | | | | | | | |

## Half garolla fitting ext. thread
Garollastutzen mit außengewinde

**23440** **Dimensions** • Baumaße

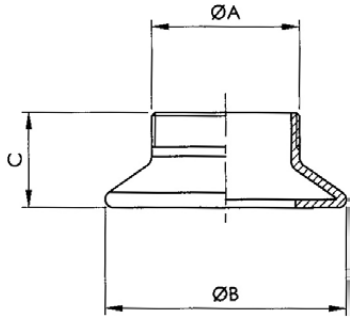


| DN | A | B | C | D | E | F | R | L | thread DIN 405 Rd x s | kg |
|---|---|---|---|---|---|---|---|---|---|---|
| **40** | 1¼" G | 65 | 31 | | | | | | | |
| **50** | 1½" G | 76 | 34 | | | | | | | |
| **60** | 2" G | 87 | 35 | | | | | | | |
| **70** | 2½" G | 97 | 35 | | | | | | | |
| **80** | 3" G | 108 | 36 | | | | | | | |
| **100** | 4" G | 129 | 40 | | | | | | | |
| **120** | 5" G | 158 | 46 | | | | | | | |

## Garolla cap
Klemmstöpsel

**23480** **Dimensions** • Baumaße

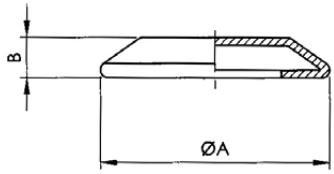


| DN | A | B | C | D | E | F | R | L | thread DIN 405 Rd x s | kg |
|---|---|---|---|---|---|---|---|---|---|---|
| **40** | 65 | 19 | | | | | | | | 0,10 |
| **50** | 76 | 19 | | | | | | | | 0,14 |
| **60** | 87 | 19 | | | | | | | | |
| **70** | 97 | 19 | | | | | | | | |
| **80** | 108 | 19 | | | | | | | | |
| **100** | 129 | 20 | | | | | | | | 0,38 |
| **120** | 158 | 25 | | | | | | | | |

## Clamp for connectors
Klemmen für anschluss

**23520** **Dimensions** • Baumaße

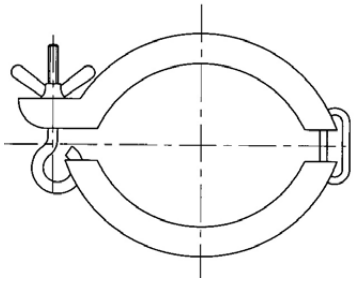

| DN | A | B | C | D | E | F | R | SW | thread DIN 405 Rd x s | kg |
|---|---|---|---|---|---|---|---|---|---|---|
| **40** | | | | | | | | | | 0,26 |
| **50** | | | | | | | | | | 0,28 |
| **60** | | | | | | | | | | 0,28 |
| **70** | | | | | | | | | | 0,30 |
| **80** | | | | | | | | | | 0,36 |
| **100** | | | | | | | | | | 0,40 |
| **120** | | | | | | | | | | |

## Winery sealing ring
Dichtung

**2352 B**

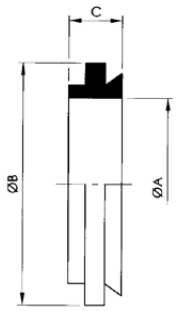


**Dimensions** • Baumaße

| DN | A | B | C | D | E | F | R | SW | thread DIN 405 Rd x s | kg |
|---|---|---|---|---|---|---|---|---|---|---|
| **40** | 40 | 62 | | | | | | | | 0,018 |
| **50** | 50 | 72 | | | | | | | | 0,018 |
| **60** | 60 | 82 | | | | | | | | 0,028 |
| **70** | 70 | 94 | | | | | | | | 0,040 |
| **80** | 80 | 104 | | | | | | | | 0,040 |
| **100** | 100 | 124 | | | | | | | | |
| **120** | 120 | 154 | | | | | | | | |

## Garolla hose holder
Halber klemmasnschluss

**23600**

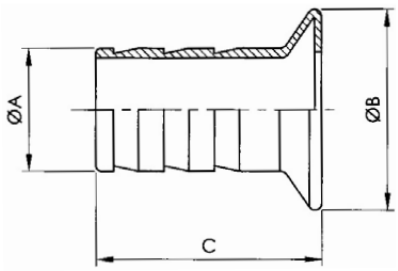


**Dimensions** • Baumaße

| DN | A | B | C | D | E | F | R | L | thread DIN 405 Rd x s | kg |
|---|---|---|---|---|---|---|---|---|---|---|
| **40** | 40 | 65 | 80 | | | | | | | 0,22 |
| **50** | 50 | 76 | 90 | | | | | | | 0,32 |
| **60** | 60 | 87 | 95 | | | | | | | |
| **70** | 70 | 97 | 100 | | | | | | | 0,44 |
| **80** | 80 | 108 | 120 | | | | | | | 0,54 |
| **100** | 100 | 129 | 140 | | | | | | | |
| **120** | 120 | 158 | 150 | | | | | | | |

## Garolla hose holder for reduction
Reduziert schlauchgarollastutzen

**23640**

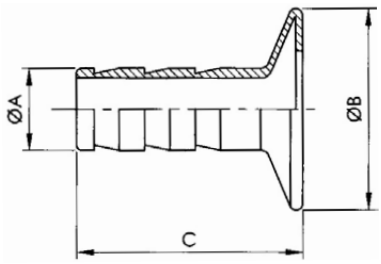


**Dimensions** • Baumaße

| DN | A | B | C | L | thread DIN 405 Rd x s | kg |
|---|---|---|---|---|---|---|
| **40** | 40 x 20, 40 x 25, 40 x 30, 40 x 35 | 65 | 80 | | | |
| **50** | 50 x 20, 50 x 25, 50 x 30, 50 x 35 | 76 | 90 | | | |
| **60** | 60 x 30, 60 x 35, 60 x 40, 60 x 50 | 87 | 95 | | | |
| **70** | 70 x 35, 70 x 40, 70 x 50, 70 x 60 | 97 | 100 | | | |
| **80** | 80 x 40, 80 x 50, 80 x 60, 80 x 70 | 108 | 120 | | | |
| **100** | 100 x 50, 100 x 60, 100 x 70, 100 x 80 | 129 | 140 | | | |
| **120** | 120 x 80, 120 x 100 | 158 | 150 | | | |

## Garolla reduction
Garolla-reduzierstück

**23680**

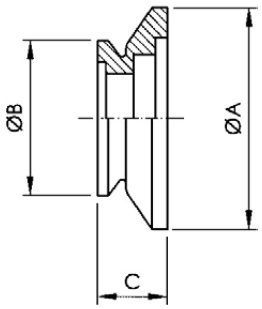


**Dimensions** • Baumaße

| DN | A | B | C | D | E | F | R | L | thread DIN 405 Rd x s | kg |
|---|---|---|---|---|---|---|---|---|---|---|
| **50/40** | 76 | 65 | 55 | | | | | | | |
| **60/50** | 87 | 76 | 60 | | | | | | | |
| **70/50** | 98 | 76 | 62 | | | | | | | |
| **70/60** | 98 | 87 | 64 | | | | | | | |
| **80/70** | 108 | 98 | 68 | | | | | | | |
| **100/70** | 129 | 98 | 70 | | | | | | | |
| **100/80** | 129 | 108 | 75 | | | | | | | |
| **120/100** | 158 | 129 | 85 | | | | | | | |

## Expanding union
Einwalzverschraubung

**20090**
**DIN 11 851**

**Description**
Beschreibung

**Expanding union 20090, DIN 11 851**
- Simple instalation
- Easy gasket exchange

**Einwalzverschraubung 20090, DIN 11 851**
- Einfache die Dichtung austauschen
- Einfache Installation

**Dimensions**/Baumaße: DN 10 - DN 150

**Thread / Gewinde:** DIN 405

**Material / Material:** 1.4301 (AISI 304)
1.4404 (AISI 316L)

**Gasket / Dichtung:** NBR
EPDM
Viton
Silikon
PTFE

Komponents / Komponenten

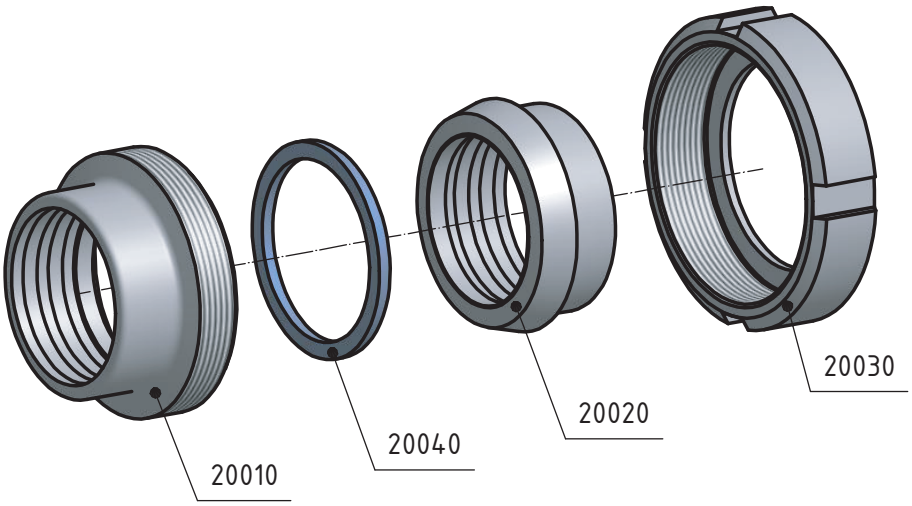


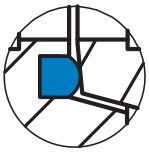

Detail gasket
Detail der Dichtung

Standard gasket / Standard dichtung - NBR

Expanding union - complete
Einwalzverschraubung - komplett

**20090**
**DIN 11 851**

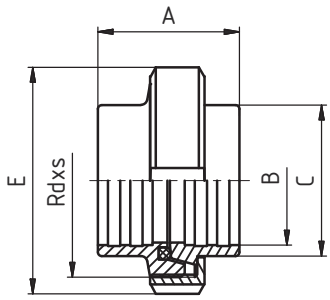


**Dimensions** • Baumaße

| DN | A | B | C | D | E | F | R | L | thread DIN 405 Rd x s | kg |
|---|---|---|---|---|---|---|---|---|---|---|
| **25** | 45 | 28,2 | 35 | | 63 | | | | 52x1/6" | 0,16 |
| **32** | 51 | 34,2 | 41 | | 70 | | | | 58x1/6" | 0,19 |
| **40** | 53 | 40,3 | 48 | | 78 | | | | 65x1/6" | 0,24 |
| **50** | 57 | 52,3 | 61 | | 92 | | | | 78x1/6" | 0,34 |
| **65** | 65 | 70,4 | 79 | | 112 | | | | 95x1/6" | 0,51 |
| **80** | 75 | 85,4 | 93 | | 127 | | | | 110x1/4" | 0,72 |

## Welding union
Anschweißverschraubung

**20120**
**DIN 11 851**

**Description**
Beschreibung

**Expanding union 20120, DIN 11 851**
- Simple instalation
- Easy gasket exchange

**Einwalzverschraubung 20120, DIN 11 851**
- Einfache die Dichtung austauschen
- Einfache Installation

**Dimensions**/Baumaße: DN 10 - DN 150

**Thread / Gewinde:** DIN 405

**Material / Material:** 1.4301 (AISI 304)
1.4404 (AISI 316L)

**Gasket / Dichtung:** NBR
EPDM
Viton
Silikon
PTFE

Komponents / Komponenten

Strength of the walls / Stärke der Mauern

| | |
|---|---|
| DN 10 | 1,5 mm |
| DN 15 - 50 | 2,5 mm |
| DN 65 - 100 | 3,0 mm |
| DN 125 - 150 | 3,5 mm |

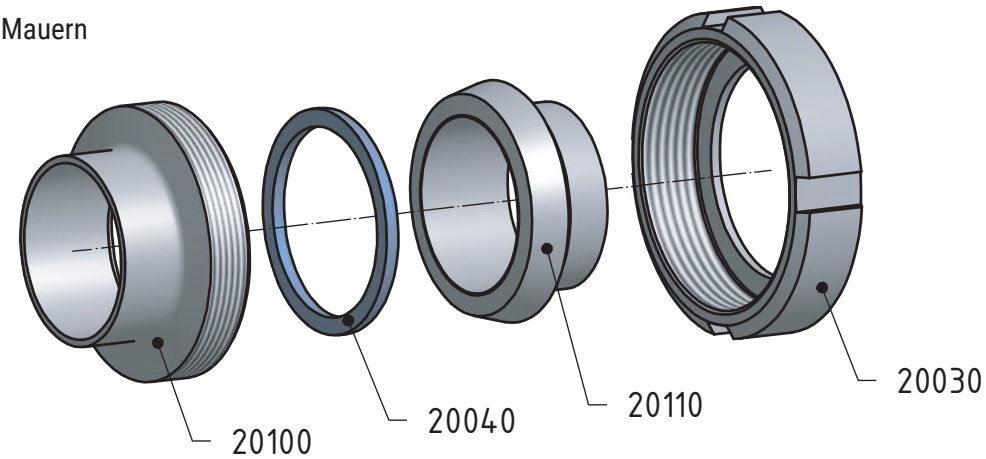


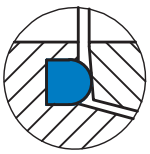

Detail gasket
Detail der Dichtung

Standard gasket / Standard dichtung - NBR

Welding union - complete
Anschweißverschraubung - komplett

**20120**
**DIN 11 851**

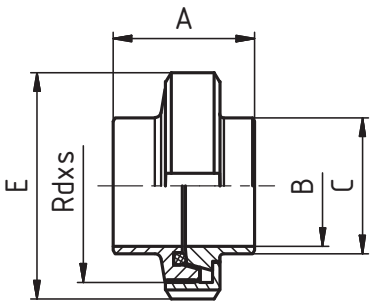


**Dimensions** • Baumaße

| DN | A | B | C | D | E | F | R | L | thread DIN 405 Rd x s | kg |
|---|---|---|---|---|---|---|---|---|---|---|
| **10** | 35 | 10 | 15 | | 38 | | | | 28 x 1/8" | 0,17 |
| **15** | 35 | 16 | 21 | | 44 | | | | 34 x 1/8" | 0,18 |
| **20** | 37 | 20 | 25 | | 54 | | | | 44 x 1/6" | 0,32 |
| **25** | 45 | 26 | 31 | | 63 | | | | 52 x 1/6" | 0,40 |
| **32** | 51 | 32 | 37 | | 70 | | | | 58 x 1/6" | 0,49 |
| **40** | 53 | 38 | 43 | | 78 | | | | 65 x 1/6" | 0,58 |
| **50** | 57 | 50 | 55 | | 92 | | | | 78 x 1/6" | 0,84 |
| **65** | 65 | 66 | 72 | | 112 | | | | 95 x 1/6" | 1,15 |
| **80** | 75 | 81 | 87 | | 127 | | | | 110 x 1/4" | 1,74 |
| **100** | 89 | 100 | 106 | | 148 | | | | 130 x 1/4" | 2,46 |
| **125** | 69 | 125 | 132 | | 178 | | | | 160 x 1/4" | 3,52 |
| **150** | 74 | 150 | 157 | | 210 | | | | 190 x 1/4" | 4,74 |

## Welding union - Type "R"
Anschweißverschraubung - Typ "R"

**20120 R**
**DIN 11 851**

**Description**
Beschreibung

**Welding union 20120 - R, DIN 11 851**
- Simple instalation
- Easy gasket exchange

**Anschweißverschraubung 20120 - R, DIN 11 851**
- Einfache die Dichtung austauschen
- Einfache Installation

**Dimensions**/Baumaße: DN 10 - DN 150

**Thread / Gewinde:** DIN 405

**Material / Material:** 1.4301 (AISI 304)
1.4404 (AISI 316L)

**Gasket / Dichtung:** NBR
EPDM
Viton
Silikon
PTFE

Komponents / Komponenten

Strength of the walls / Stärke der Mauern

DN 10 - 50 1,5 mm
DN 50 - 150 2,0 mm

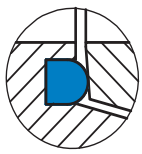

Detail gasket
Detail der Dichtung

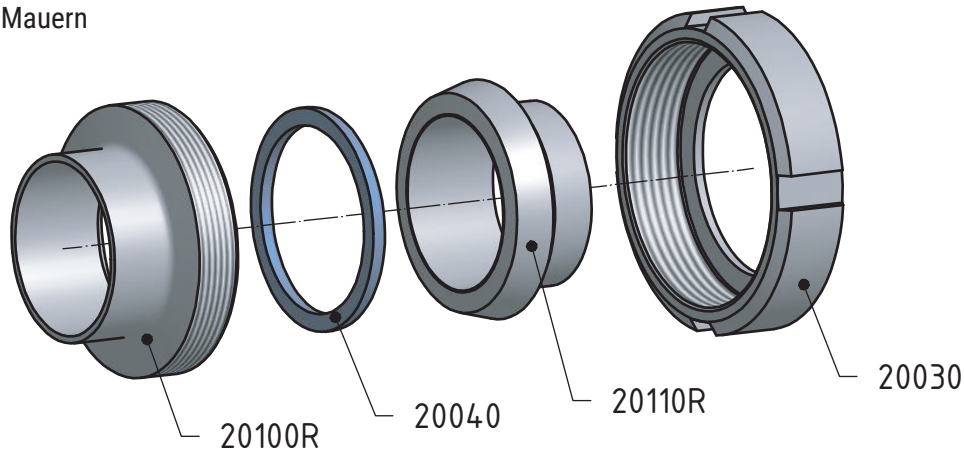


Standard gasket / Standard dichtung - NBR

Welding union - complete
Anschweißverschraubung - komplett

**20120 R**
**DIN 11 851**

**Dimensions** • Baumaße

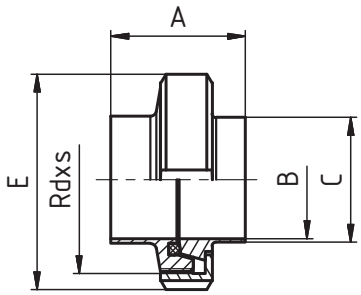


| DN | A | B | C | D | E | F | R | L | thread DIN 405 Rd x s | kg |
|---|---|---|---|---|---|---|---|---|---|---|
| **10** | 35 | 10 | 13 | | 38 | | | | 28 x 1/8" | 0,13 |
| **15** | 35 | 16 | 19 | | 44 | | | | 34 x 1/4" | 0,16 |
| **20** | 37 | 20 | 23 | | 54 | | | | 44 x 1/6" | 0,28 |
| **25** | 45 | 26 | 29 | | 63 | | | | 52 x 1/6" | 0,37 |
| **32** | 51 | 32 | 35 | | 70 | | | | 58 x 1/6" | 0,45 |
| **40** | 53 | 38 | 41 | | 78 | | | | 65 x 1/6" | 0,53 |
| **50** | 57 | 50 | 53 | | 92 | | | | 78 x 1/6" | 0,67 |
| **65** | 65 | 66 | 70 | | 112 | | | | 95 x 1/6" | 1,19 |
| **80** | 75 | 81 | 85 | | 127 | | | | 110 x 1/4" | 1,67 |
| **100** | 89 | 100 | 104 | | 148 | | | | 130 x 1/4" | 2,32 |
| **125** | 69 | 125 | 129 | | 178 | | | | 160 x 1/4" | 3,21 |
| **150** | 74 | 150 | 154 | | 210 | | | | 190 x 1/4" | 4,60 |

## Welding union - Type "T"
Anschweißverschraubung - Typ "T"

**20120 T**

**Description**
Beschreibung

**Welding union 20120 - T, DIN 11 851**
- Simple instalation
- Easy gasket exchange

**Anschweißverschraubung 20120 - T, DIN 11 851**
- Einfache die Dichtung austauschen
- Einfache Installation

**Dimensions**/Baumaße: DN 10 - DN 150

**Thread / Gewinde:** DIN 405

**Material / Material:** 1.4301 (AISI 304)
1.4404 (AISI 316L)

**Gasket / Dichtung:** NBR
EPDM
Viton
Silikon
PTFE

Komponents / Komponenten

Strength of the walls / Stärke der Mauern

| | |
|---|---|
| DN 10 - 15 | 4,0 mm |
| DN 20 | 5,0 mm |
| DN 25 - 32 | 4,5 mm |
| DN 40 | 5,0 mm |
| DN 50 | 5,5 mm |
| DN 65 | 6,5 mm |
| DN 80 | 6,0 mm |
| DN 100 | 7,0 mm |

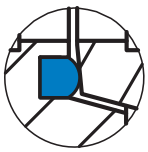

Detail gasket
Detail der Dichtung

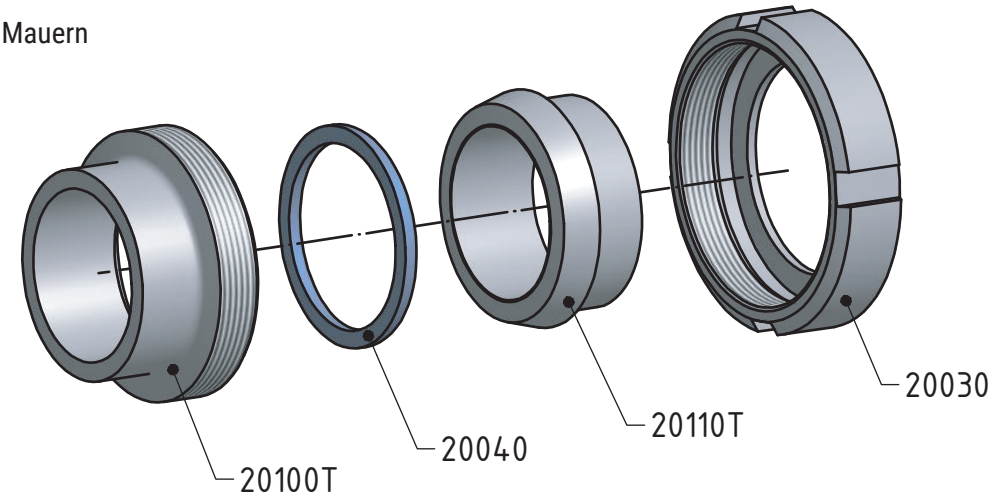


Standard gasket / Standard dichtung - NBR

Welding union - complete
Anschweißverschraubung - komplett

**20120 T**

**Dimensions** • Baumaße

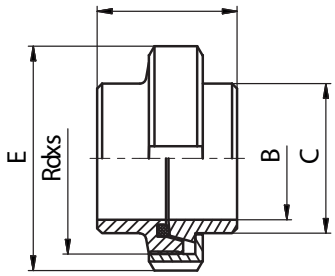


| DN | A | B | C | D | E | F | R | L | thread DIN 405 Rd x s | kg |
|---|---|---|---|---|---|---|---|---|---|---|
| **10** | 35 | 10 | 18 | | 38 | | | | 28x1/8" | 0,19 |
| **15** | 35 | 16 | 24 | | 44 | | | | 34x1/4" | 0,19 |
| **20** | 37 | 20 | 30 | | 54 | | | | 44x1/6" | 0,34 |
| **25** | 45 | 26 | 35 | | 63 | | | | 52x1/6" | 0,45 |
| **32** | 51 | 32 | 41 | | 70 | | | | 58x1/6" | 0,57 |
| **40** | 53 | 38 | 48 | | 78 | | | | 65x1/6" | 0,69 |
| **50** | 57 | 50 | 61 | | 92 | | | | 78x1/6" | 0,96 |
| **65** | 65 | 66 | 79 | | 112 | | | | 95x1/6" | 1,58 |
| **80** | 75 | 81 | 93 | | 127 | | | | 110x1/4" | 2,20 |
| **100** | 89 | 100 | 114 | | 148 | | | | 130x1/4" | 3,12 |

## Welding union ISO
Anschweißverschraubung ISO

**21030**
**ISO**

**Description**
Beschreibung

**Welding union 21030 ISO**
- Simple instalation
- Easy gasket exchange

**Anschweißverschraubung 21030 ISO**
- Einfache die Dichtung austauschen
- Einfache Installation

**Dimensions**/Baumaße: DN 10 - DN 150

**Thread / Gewinde:** DIN 405

**Material / Material:** 1.4301 (AISI 304)
1.4404 (AISI 316L)

**Gasket / Dichtung:** NBR
EPDM
Viton
Silikon
PTFE

Komponents / Komponenten

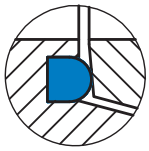

Detail gasket
Detail der Dichtung

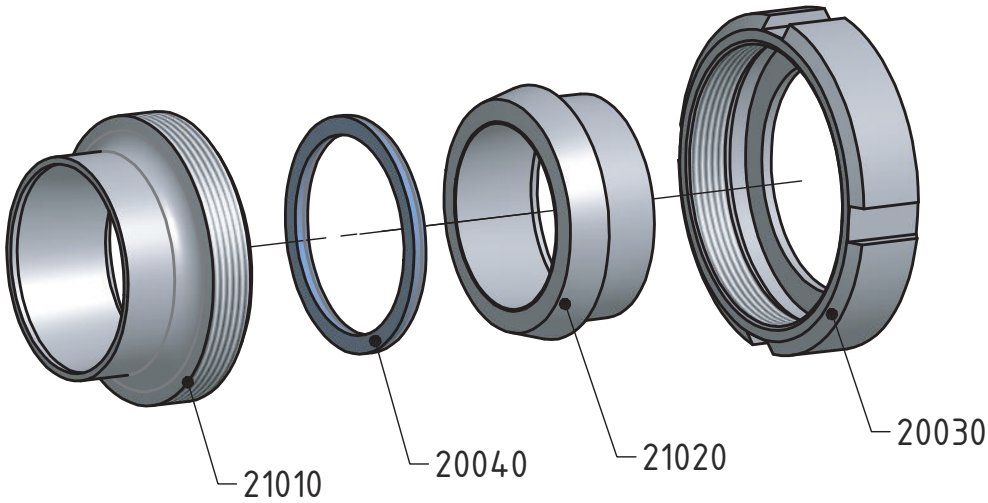


Standard gasket /Standard Dichtring - EPDM

Welding union - complete ISO
Anschweißverschraubung - komplett ISO

**21030**
**ISO**

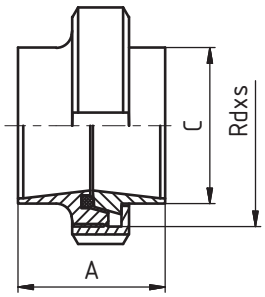


**Dimensions** • Baumaße

| DN | A | B | C | D | E | F | R | L | thread DIN 405 Rd x s | kg |
|---|---|---|---|---|---|---|---|---|---|---|
| **10** | 34 | | 18 | | | | | | 28x1/8" | 0,15 |
| **15** | 34 | | 21,3 | | | | | | 34x1/8" | 0,18 |
| **20** | 36 | | 26,9 | | | | | | 44x1/6" | 0,30 |
| **25** | 45 | | 33,7 | | | | | | 52x1/6" | 0,42 |
| **32** | 51 | | 42,4 | | | | | | 58x1/6" | 0,51 |
| **40** | 53 | | 48,3 | | | | | | 65x1/6" | 0,61 |
| **50** | 57 | | 60,3 | | | | | | 78x1/6" | 0,84 |
| **65** | 65 | | 76,1 | | | | | | 95x1/6" | 1,31 |
| **80** | 75 | | 88,9 | | | | | | 110x1/4" | 1,80 |
| **100** | 89 | | 114,3 | | | | | | 130x1/4" | 2,66 |

## Welding union SMS
Anschweißverschraubung SMS

**21120**
**SMS**

**Description**
Beschreibung

**Welding union SMS 21120**
- Simple instalation
- Easy gasket exchange

**Anschweißverschraubung SMS 21120**
- Einfache die Dichtung austauschen
- Einfache Installation

**Dimensions / Baumaße:** DN 10 - DN 150
**Thread / Gewinde:** DIN 405
**Material / Material:** 1.4301 (AISI 304)
1.4404 (AISI 316L)
**Gasket / Dichtring:** NBR
EPDM
Viton
Silikon
PTFE

Komponents / Komponenten

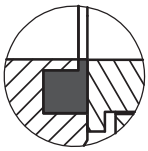

Detail gasket
Detail der Dichtung

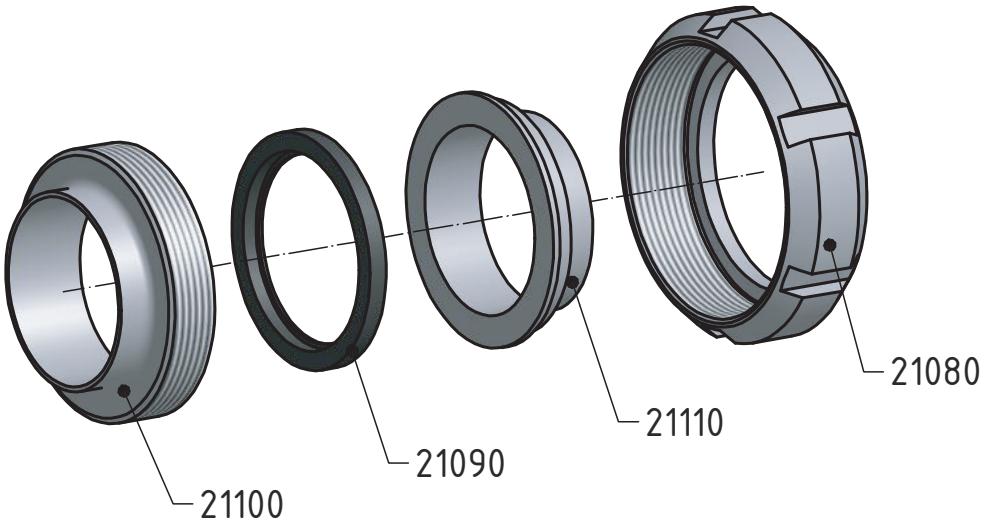


Standard gasket /Standard Dichtring - EPDM

Welding union - complete
Anschweißverschraubung - komplett

**21120**
**SMS**

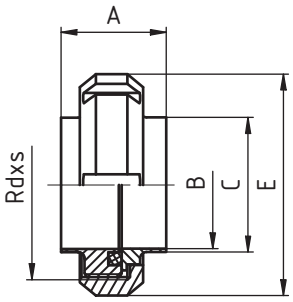


**Dimensions** • Baumaße

| DN | A | B | C | D | E | F | R | L | thread DIN 405 Rd x s | kg |
|---|---|---|---|---|---|---|---|---|---|---|
| **25** | 35,5 | 22,5 | 25 | | 51 | | | | 40x1/6 | 0,18 |
| **38** | 40 | 35,5 | 38 | | 74 | | | | 60x1/6 | 0,47 |
| **51** | 41 | 48,5 | 50,8 | | 84 | | | | 70x1/6 | 0,55 |
| **63,5** | 45 | 60,5 | 63,5 | | 100 | | | | 85x1/6 | 0,83 |
| **76** | 47 | 72,9 | 76,1 | | 114 | | | | 98x1/6 | 1,13 |
| **101,6** | 50 | 97,6 | 101,6 | | 138 | | | | 125x1/4 | 2,78 |
| **104** | 50 | 100 | 104 | | 138 | | | | 125x1/4 | 2,78 |

## Clamp union - S - DIN
Clampverbindung - S - DIN

**21250**
**DIN 32 676**

**Description**
Beschreibung

**Clamp union - S - DIN 21250**
- Simple instalation
- Easy gasket exchange

**Clampverbindung - S - DIN 21250**
- Einfache die Dichtung austauschen
- Einfache Installation

**Dimensions / Baumaße:** DN 10 - DN 150

**Material / Material:** 1.4301 (AISI 304)
1.4404 (AISI 316L)

**Gasket / Dichtring:** Silikon
PTFE - Viton
Viton
EPDM

Komponents / Komponenten

Detail gasket
Detail der Dichtung

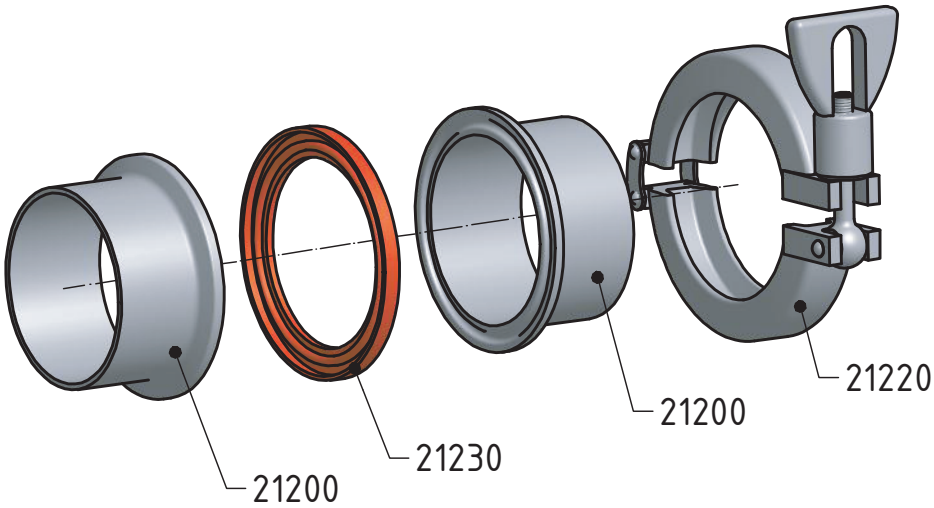


Standard gasket /Standard Dichtring - Silikon

Clamp union - S - DIN - complete
Clampverbindung - S - DIN - komplett

**21250**
**DIN 32 676**

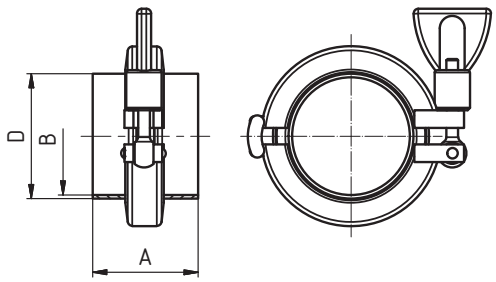


**Dimensions** • Baumaße

| DN | A | B | C | D | E | F | R | L | thread DIN 405 Rd x s | kg |
|---|---|---|---|---|---|---|---|---|---|---|
| **10** | 45 | 10 | | 13 | | | | | | 0,28 |
| **15** | 45 | 16 | | 19 | | | | | | 0,28 |
| **20** | 45 | 20 | | 23 | | | | | | 0,30 |
| **25** | 45 | 26 | | 29 | | | | | | 0,35 |
| **32** | 45 | 32 | | 35 | | | | | | 0,35 |
| **40** | 45 | 38 | | 41 | | | | | | 0,37 |
| **50** | 45 | 50 | | 53 | | | | | | 0,39 |
| **65** | 58 | 66 | | 70 | | | | | | 0,89 |
| **80** | 58 | 81 | | 85 | | | | | | 0,95 |
| **100** | 58 | 100 | | 104 | | | | | | 0,99 |
| **125** | 58 | 125 | | 129 | | | | | | 1,15 |
| **150** | 58 | 150 | | 154 | | | | | | 1,30 |

## Clamp union - S - SMS
Clampverbindung - S - SMS

**21252**
**SMS**

**Description**
Beschreibung

**Clamp union - S - SMS 21252**
- Simple instalation
- Easy gasket exchange

**Clampverbindung - S - SMS 212552**
- Einfache die Dichtung austauschen
- Einfache Installation

**Dimensions / Baumaße:** DN 10 - DN 150

**Material / Material:** 1.4301 (AISI 304)
1.4404 (AISI 316L)

**Gasket / Dichtring:** Silikon
PTFE - Viton
Viton
EPDM

Komponents / Komponenten

Detail gasket
Detail der Dichtung

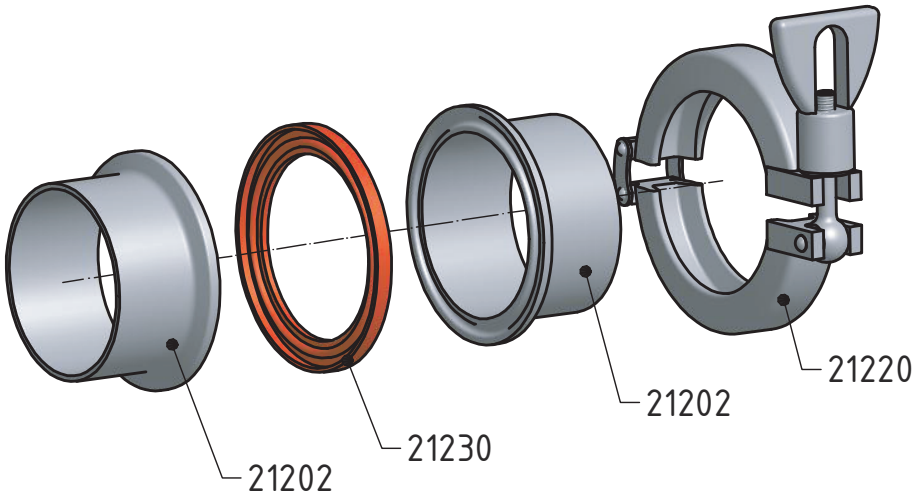


Standard gasket /Standard Dichtring - Silikon

Clamp union - S - SMS - complete
Clampverbindung - S - SMS - komplett

**21252**
**SMS**

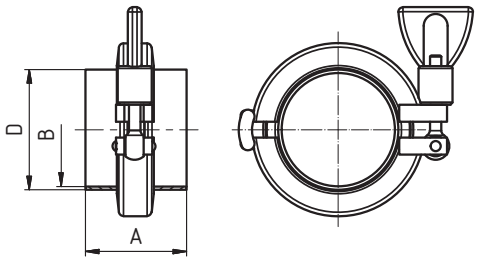


**Dimensions** • Baumaße

| DN | A | B | C | D | E | F | R | L | thread DIN 405 Rd x s | kg |
|---|---|---|---|---|---|---|---|---|---|---|
| **25** | 43 | 22,5 | | 25 | | | | | | 0,35 |
| **38** | 43 | 35,5 | | 38,1 | | | | | | 0,37 |
| **51** | 43 | 48,5 | | 51 | | | | | | 0,39 |
| **63,5** | 56 | 60,5 | | 63,5 | | | | | | 0,89 |
| **76** | 56 | 72,9 | | 76,1 | | | | | | 0,95 |
| **101,6** | 56 | 97,6 | | 101,6 | | | | | | 0,99 |

## Welding union
Anschweißverschraubung

**22320**
**DIN 11 853**

**Description**
Beschreibung

**Welding union 22320, DIN 11 853-1**
- Simple instalation
- Easy gasket exchange

**Anschweißverschraubung 22320, DIN 11 853-1**
- Einfache die Dichtung austauschen
- Einfache Installation

**Baumaße / Dimensions:** DN 10 - DN 100
**Thread / Gewinde:** DIN 405
**Material / Material:** 1.4301 (AISI 304)
1.4404 (AISI 316L)
**Dichtring / Gasket:** NBR
EPDM
Viton

Komponents / Komponenten

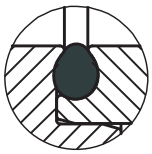

Detail gasket
Detail der Dichtung

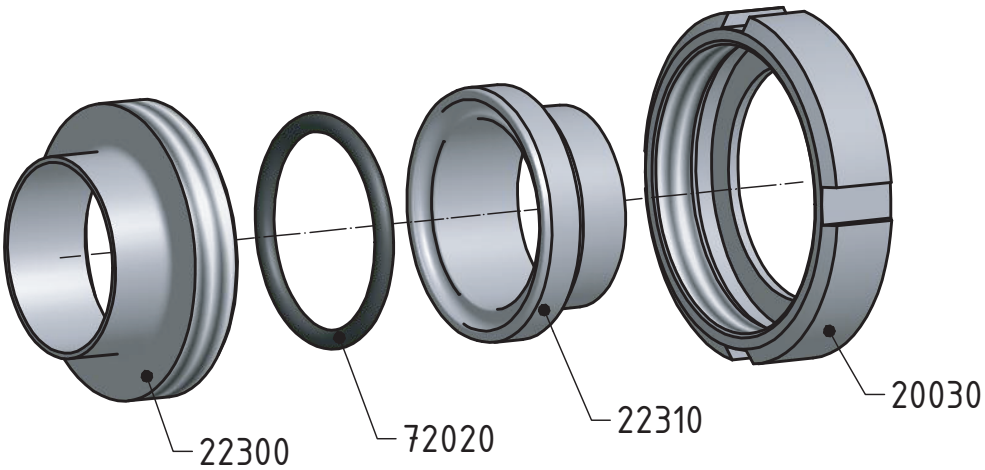


Standard gasket /Standard Dichtring - EPDM

Welding union - complete
Anschweißverschraubung - komplett

**22320**
**DIN 11 853**

**Dimensions** • Baumaße

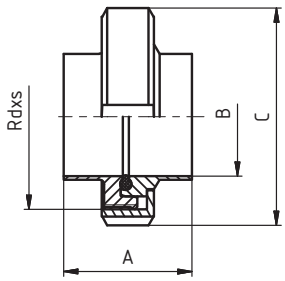


| DN | A | B | C | D | E | F | R | L | thread DIN 405 Rd x s | kg |
|---|---|---|---|---|---|---|---|---|---|---|
| **10** | 32 | 10 | 38 | | | | | | 28 x 1/8" | 0,14 |
| **15** | 32 | 16 | 44 | | | | | | 34 x 1/8" | 0,18 |
| **20** | 34 | 20 | 54 | | | | | | 44 x 1/6" | 0,30 |
| **25** | 42 | 26 | 63 | | | | | | 52 x 1/6" | 0,41 |
| **32** | 48 | 32 | 70 | | | | | | 58 x 1/6" | 0,48 |
| **40** | 50 | 38 | 78 | | | | | | 65 x 1/6" | 0,57 |
| **50** | 54 | 50 | 92 | | | | | | 78 x 1/6" | 0,78 |
| **65** | 62 | 66 | 112 | | | | | | 95 x 1/6" | 1,27 |
| **80** | 72 | 81 | 127 | | | | | | 110 x 1/4" | 1,76 |
| **100** | 86 | 100 | 148 | | | | | | 130 x 1/4" | 2,40 |

## Welding union
Anschweißverschraubung

**22490**
**DIN 11 864-1-A**

**Description**
Beschreibung

**Welding union 22490, DIN 11 864-1**
- Simple instalation
- Easy gasket exchange

**Anschweißverschraubung 22490, DIN 11 864-1**
- Einfache die Dichtung austauschen
- Einfache Installation

**Baumaße / Dimensions:** DN 10 - DN 100
**Thread / Gewinde:** DIN 405
**Material / Material:** 1.4301 (AISI 304)
1.4404 (AISI 316L)
**Dichtring / Gasket:** NBR
EPDM
Viton

Komponents / Komponenten

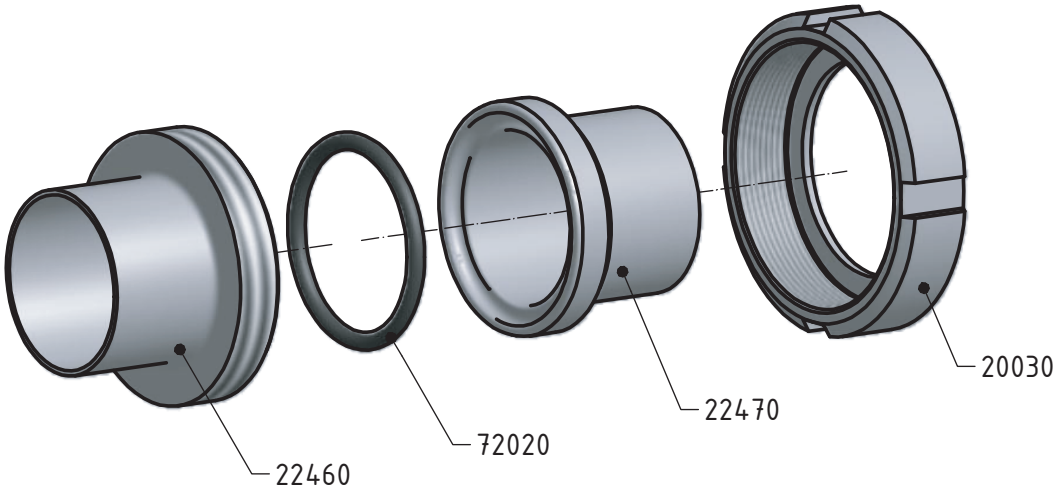

Detail gasket
Detail der Dichtung

Standard gasket /Standard Dichtring - EPDM

Welding union - complete
Anschweißverschraubung - komplett

**22490**
**DIN 11 864-1-A**

**Dimensions** • Baumaße

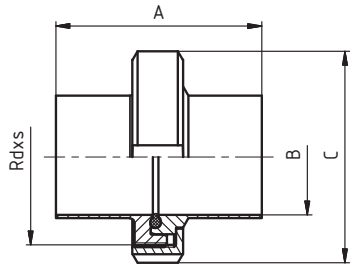


| DN | A | B | C | D | E | F | R | L | thread DIN 405 Rd x s | kg |
|---|---|---|---|---|---|---|---|---|---|---|
| **10** | 76 | 10 | 38 | | | | | | 28x1/8" | 0,08 |
| **15** | 76 | 16 | 44 | | | | | | 34x1/8" | 0,11 |
| **20** | 76 | 20 | 54 | | | | | | 44x1/6" | 0,19 |
| **25** | 77 | 26 | 63 | | | | | | 52x1/6" | 0,26 |
| **32** | 88 | 32 | 70 | | | | | | 58x1/6" | 0,31 |
| **40** | 88 | 38 | 78 | | | | | | 65x1/6" | 0,36 |
| **50** | 89 | 50 | 92 | | | | | | 78x1/6" | 0,50 |
| **65** | 113 | 66 | 112 | | | | | | 95x1/6" | 0,86 |
| **80** | 117 | 81 | 127 | | | | | | 110x1/4" | 1,16 |
| **100** | 120 | 100 | 148 | | | | | | 130x1/4" | 1,51 |

## Flange connection PN 10
Flanschverbindung PN 10

**20720**
**DIN 2576**

**Description**
Beschreibung

**Flange connection PN 10**
- Simple instalation
- Easy gasket exchange

**FlanschverbindungPN 10**
- Einfache installation
- Einfache die Dichtung austauschen

**Dimensions / Baumaße:** DN 10 - DN 150

**Material / Material:** 1.4301 (AISI 304)
1.4404 (AISI 316L)

**Gasket / Dichtring:** NBR
EPDM
Viton

Komponents / Komponenten

Detail gasket
Detail der Dichtung

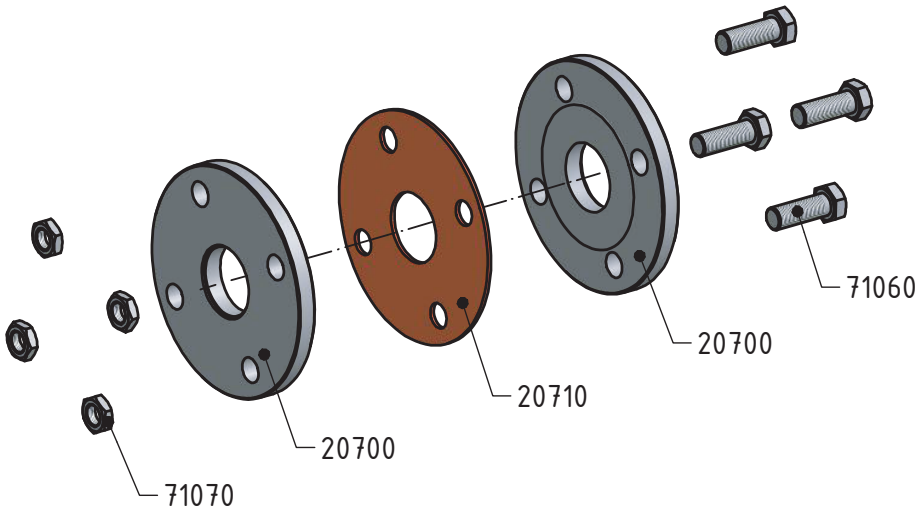


Standard gasket / Standard Dichtring - NBR

Flange connection PN 10 - complete
Flanschverbindung PN 10 - komplett

**20720**
**DIN 2576**

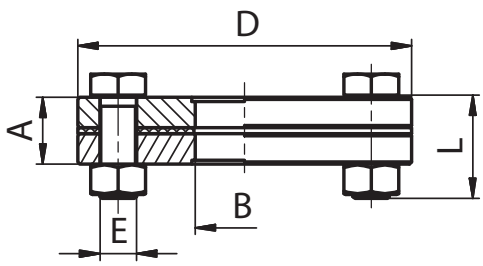


**Dimensions** • Baumaße

| DN | A | B | C | D | E | F | R | L | Rd x s | kg |
|---|---|---|---|---|---|---|---|---|---|---|
| **10** | 31 | 10 | | 90 | 4 x M12 | | | 40 | | 1,30 |
| **15** | 31 | 16 | | 95 | 4 x M12 | | | 40 | | 1,40 |
| **20** | 31 | 20 | | 105 | 4 x M12 | | | 45 | | 2,00 |
| **25** | 31 | 26 | | 115 | 4 x M12 | | | 45 | | 2,30 |
| **32** | 31 | 32 | | 140 | 4 x M16 | | | 50 | | 3,50 |
| **40** | 31 | 38 | | 150 | 4 x M16 | | | 50 | | 4,00 |
| **50** | 31 | 50 | | 165 | 4 x M16 | | | 55 | | 5,10 |
| **65** | 32 | 66 | | 185 | 4 x M16 | | | 55 | | 6,00 |
| **80** | 36 | 81 | | 200 | 8 x M16 | | | 55 | | 7,50 |
| **100** | 36 | 100 | | 220 | 8 x M16 | | | 55 | | 8,30 |
| **125** | 44 | 125 | | 250 | 8 x M16 | | | 60 | | 13,00 |
| **150** | 52 | 150 | | 285 | 8 x M20 | | | 65 | | 16,70 |

## Flange connection PN 16
Flanschverbindung PN 16

**20740**
**DIN 2633**

**Description**
Beschreibung

**Flange connection PN 16 DIN 2633**
- Simple instalation
- Easy gasket exchange

**Flanschverbindung PN 16 DIN 2633**
- Einfache installation
- Einfache die Dichtung austauschen

**Dimensions / Baumaße:** DN 10 - DN 150

**Material / Material:** 1.4301 (AISI 304)
1.4404 (AISI 316L)

**Gasket / Dichtring:** NBR
EPDM
Viton

Komponents / Komponenten

Detail gasket
Detail der Dichtung

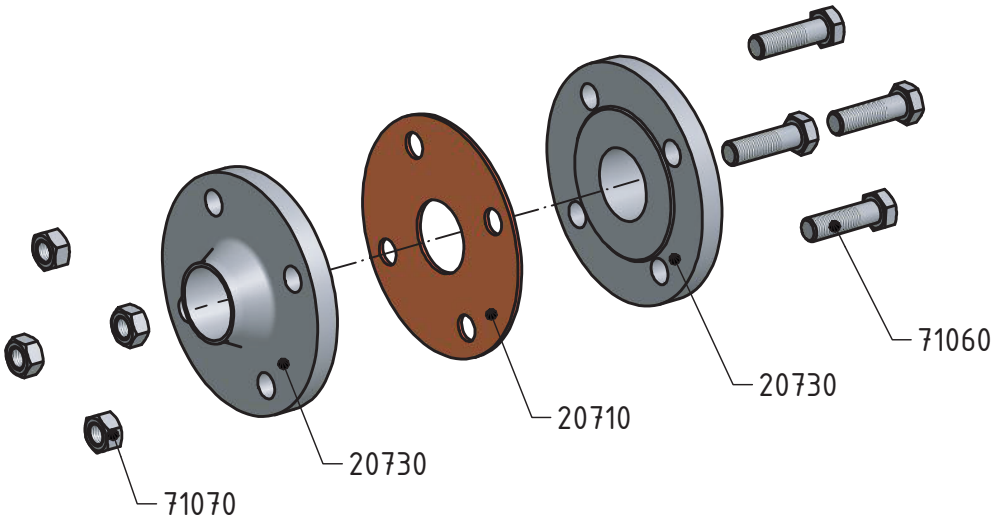


Standard gasket /Standard Dichtring - NBR

Flange connection PN 16 - complete
Flanschverbindung PN 16 - komplett

**20740**
**DIN 2633**

**Dimensions** • Baumaße

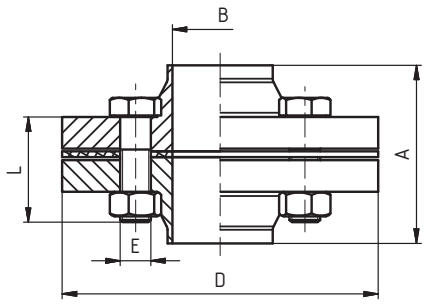


| DN | A | B | C | D | E | F | R | L | thread DIN 405 Rd x s | kg |
|---|---|---|---|---|---|---|---|---|---|---|
| **10** | 73 | 10 | | 90 | 4 x M12 | | | 45 | | 1,16 |
| **15** | 73 | 16 | | 95 | 4 x M12 | | | 45 | | 1,30 |
| **20** | 79 | 20 | | 105 | 4 x M12 | | | 45 | | 1,90 |
| **25** | 79 | 26 | | 115 | 4 x M12 | | | 50 | | 2,28 |
| **32** | 83 | 32 | | 140 | 4 x M16 | | | 50 | | 3,20 |
| **40** | 88 | 38 | | 150 | 4 x M16 | | | 50 | | 3,60 |
| **50** | 94 | 50 | | 165 | 4 x M16 | | | 55 | | 5,06 |
| **65** | 94 | 66 | | 185 | 4 x M16 | | | 55 | | 6,12 |
| **80** | 104 | 81 | | 200 | 8 x M16 | | | 60 | | 7,40 |
| **100** | 108 | 100 | | 220 | 8 x M16 | | | 60 | | 9,24 |
| **125** | 114 | 125 | | 250 | 8 x M16 | | | 65 | | 12,60 |
| **150** | 114 | 150 | | 285 | 8 x M20 | | | 70 | | 15,5 |

## Flange connection complete PN 10
Flanschverbindung komplett PN10

**20420**

**Description**
Beschreibung

**Flange connection PN 10**
- Simple instalation
- Easy gasket exchange

**Flanschverbindung PN 10**
- Einfache installation
- Einfache die Dichtung austauschen

**Dimensions / Baumaße:** DN 10 - DN 150

**Material / Material:** 1.4301 (AISI 304)
1.4404 (AISI 316L)

**Gasket / Dichtring:** NBR
EPDM
Viton

Komponents / Komponenten

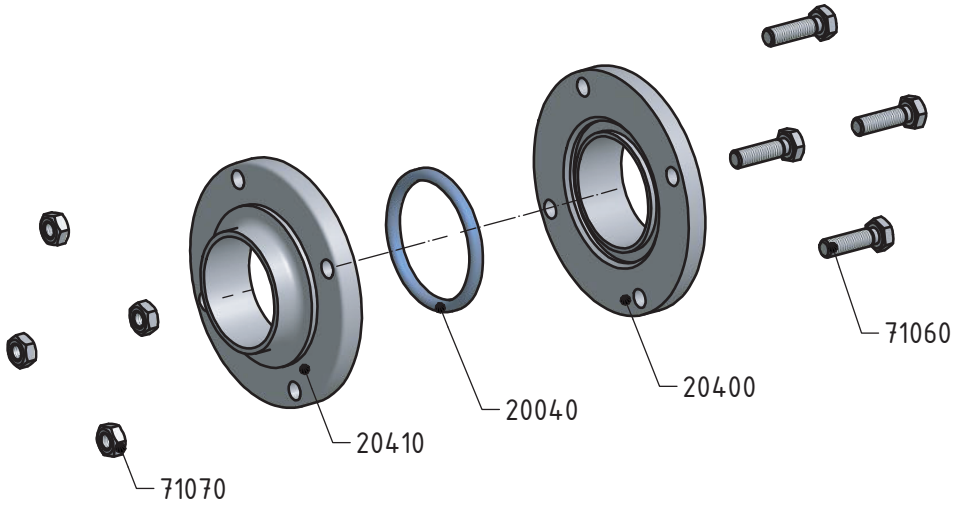


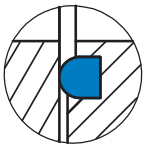

Detail gasket
Detail der Dichtung

Standard gasket /Standard Dichtring - NBR

Flange connection PN 10 - complete
Flanschverbindung PN 10 - komplett

**20420**

**Dimensions** • Baumaße

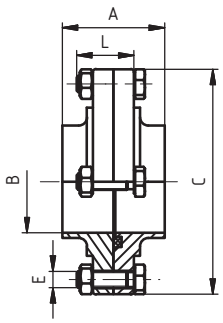


| DN | A | B | C | D | E | F | R | L | thread DIN 405 Rd x s | kg |
|---|---|---|---|---|---|---|---|---|---|---|
| **10** | 40 | 10 | 62 | | 4 x M8 | | | 28 | | 0,40 |
| **15** | 40 | 16 | 68 | | 4 x M8 | | | 28 | | 0,52 |
| **20** | 40 | 20 | 75 | | 4 x M8 | | | 28 | | 0,58 |
| **25** | 40 | 26 | 87 | | 4 x M8 | | | 28 | | 0,78 |
| **32** | 40 | 32 | 92 | | 4 x M8 | | | 28 | | 0,92 |
| **40** | 50 | 38 | 97 | | 4 x M8 | | | 28 | | 0,94 |
| **50** | 50 | 50 | 110 | | 4 x M8 | | | 28 | | 1,18 |
| **65** | 50 | 66 | 127 | | 4 x M8 | | | 28 | | 1,50 |
| **80** | 60 | 81 | 142 | | 4 x M8 | | | 40 | | 2,56 |
| **100** | 60 | 100 | 162 | | 4 x M8 | | | 40 | | 3,44 |
| **125** | 80 | 125 | 200 | | 6 x M10 | | | 45 | | 5,74 |
| **150** | 90 | 150 | 230 | | 6 x M10 | | | 45 | | 7,70 |

## Hygienic flange connection PN10
Hygiene flanschverbindung PN 10

**22870**
**DIN 11 853**

**Description**
Beschreibung

**Hygienic flange connection PN10 DIN 11853**
- Simple instalation
- Easy gasket exchange

**Hygiene flanschverbindung PN 10 DIN 11853**
- Einfache installation
- Einfache die Dichtung austauschen

**Dimensions / Baumaße:** DN 10 - DN 150

**Material / Material:** 1.4301 (AISI 304)
1.4404 (AISI 316L)

**Gasket / Dichtring:** EPDM
Viton

Komponents / Komponenten

Detail gasket
Detail der Dichtung

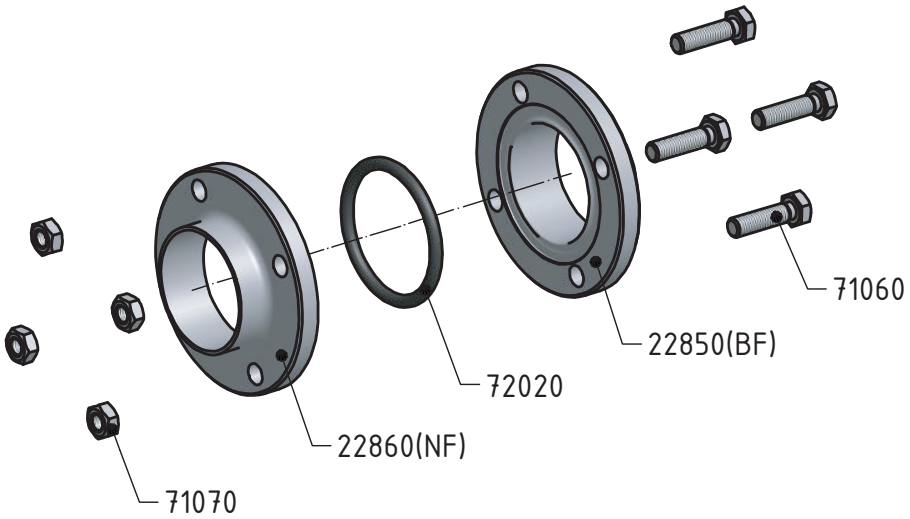


Standard gasket /Standard Dichtring - EPDM

Hygienic flange connection PN10 - complete
Hygiene flanschverbindung PN 10 - komplett

**22870**
**DIN 11 853**

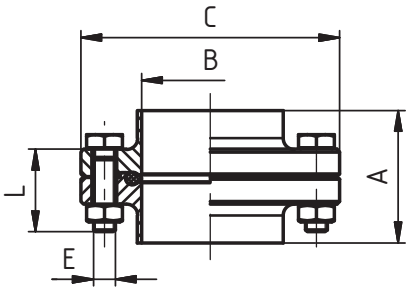


**Dimensions** • Baumaße

| DN | A | B | C | D | E | F | R | L | thread DIN 405 Rd x s | kg |
|---|---|---|---|---|---|---|---|---|---|---|
| **10** | 48 | 10 | 54 | | 4 x M8 | | | 28 | | 0,41 |
| **15** | 48 | 16 | 59 | | 4 x M8 | | | 28 | | 0,46 |
| **20** | 48 | 20 | 64 | | 4 x M8 | | | 28 | | 0,52 |
| **25** | 48 | 26 | 70 | | 4 x M8 | | | 28 | | 0,60 |
| **32** | 48 | 32 | 76 | | 4 x M8 | | | 28 | | 0,66 |
| **40** | 48 | 38 | 82 | | 4 x M8 | | | 28 | | 0,73 |
| **50** | 48 | 50 | 94 | | 4 x M8 | | | 28 | | 0,87 |
| **65** | 48 | 66 | 113 | | 8 x M8 | | | 28 | | 1,21 |
| **80** | 52 | 81 | 133 | | 8 x M10 | | | 35 | | 1,96 |
| **100** | 52 | 100 | 159 | | 8 x M10 | | | 40 | | 2,97 |
| **125** | 56 | 125 | 183 | | 8 x M10 | | | 40 | | 3,47 |
| **150** | 56 | 150 | 213 | | 8 x M12 | | | 45 | | 5,02 |

## Aseptic flange connection PN 10
Aseptic flanschverbindung PN 10

**22930**

**DIN 11 864-2-A**

**Description**
Beschreibung

**Aseptic flange connection PN 10 DIN 11864**
- Simple instalation
- Easy gasket exchange

**Aseptic flanschverbindung PN 10 DIN 11864**
- Einfache installation
- Einfache die Dichtung austauschen

**Dimensions / Baumaße:** DN 10 - DN 150

**Material / Material:** 1.4301 (AISI 304)
1.4404 (AISI 316L)

**Gasket / Dichtring:** EPDM
Viton

Komponents / Komponenten

Detail gasket
Detail der Dichtung

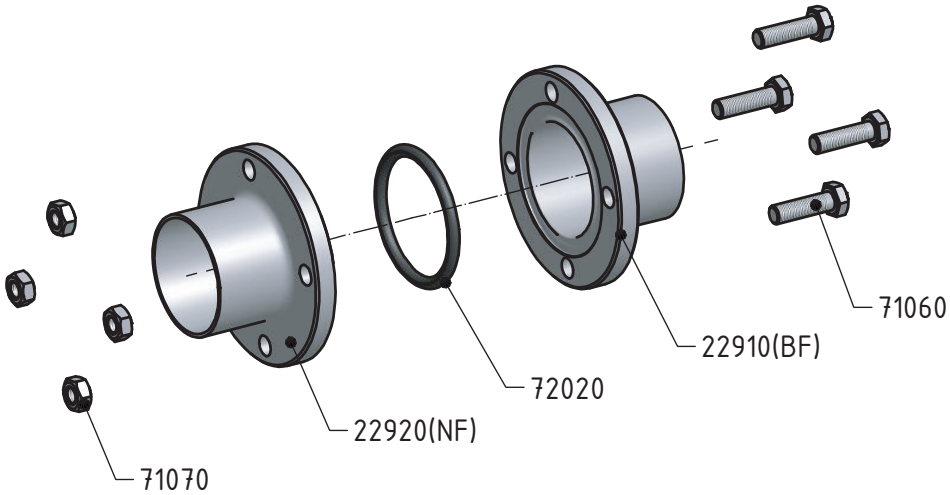


Standard gasket /Standard Dichtring - EPDM

Aseptic flange connection PN10 - complete
Aseptic flanschverbindung PN 10 - komplett

**22930**

**DIN 11 864-2-A**

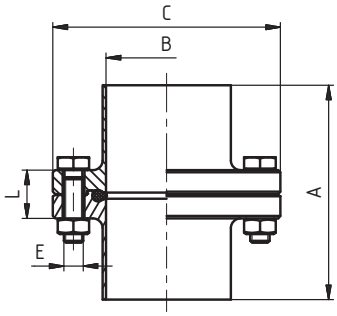


**Dimensions** • Baumaße

| DN | A | B | C | D | E | F | R | L | thread DIN 405 Rd x s | kg |
|---|---|---|---|---|---|---|---|---|---|---|
| **10** | 80 | 10 | 54 | | 4 x M8 | | | 28 | | |
| **15** | 80 | 16 | 59 | | 4 x M8 | | | 28 | | |
| **20** | 80 | 20 | 64 | | 4 x M8 | | | 28 | | |
| **25** | 80 | 26 | 70 | | 4 x M8 | | | 28 | | |
| **32** | 90 | 32 | 76 | | 4 x M8 | | | 28 | | |
| **40** | 90 | 38 | 82 | | 4 x M8 | | | 28 | | |
| **50** | 90 | 50 | 94 | | 4 x M8 | | | 28 | | |
| **65** | 108 | 66 | 113 | | 8 x M8 | | | 28 | | |
| **80** | 116 | 81 | 133 | | 8 x M10 | | | 35 | | |
| **100** | 116 | 100 | 159 | | 8 x M10 | | | 40 | | |
| **125** | 120 | 125 | 183 | | 8 x M10 | | | 40 | | |
| **150** | 120 | 150 | 213 | | 8 x M12 | | | 45 | | |

## Clamp union S DIN 11964-3
Clampverbindungen S DIN 11864-3

**22970**
**DIN 11864-3**

**Description**
Beschreibung

**Clamp union - S - DIN 11864-3**
- Simple instalation
- Easy gasket exchange

**Clampverbindung - S - DIN 11864-3**
- Einfache die Dichtung austauschen
- Einfache Installation

**Dimensions / Baumaße:** DN 10 - DN 100

**Material / Material:** 1.4404 (AISI 316L)

**Gasket / Dichtring:** Silikon, EPDM, **PTFE / Viton**

Komponents / Komponenten

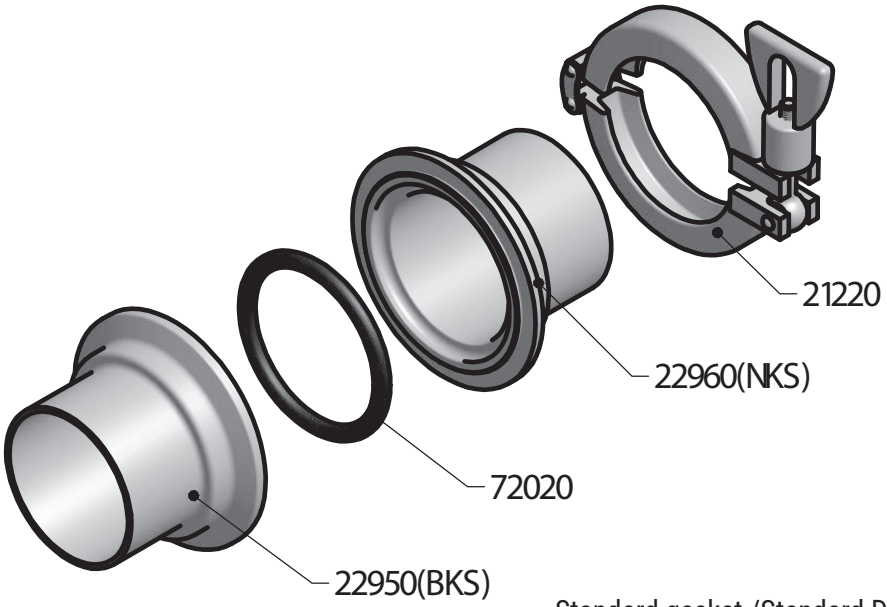


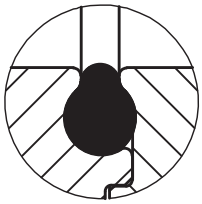

Detail gasket
Detail der Dichtung

Standard gasket /Standard Dichtring
- Silikon, EPDM, PTFE – Viton

Clamp union S DIN 11964-3
- complete
Clampverbindungen S DIN 11864-3
- komplett

**22970**
**DIN 11864-3**

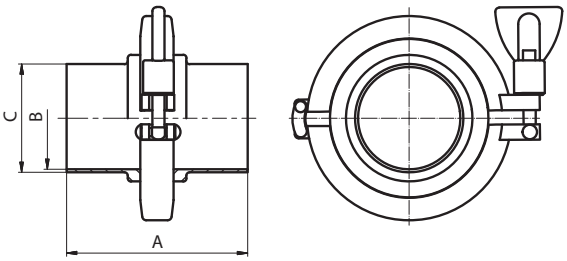


**Dimensions** • Baumaße

| DN | A | B | C | D | E | F | R | L | thread DIN 405 Rd x s | kg |
|---|---|---|---|---|---|---|---|---|---|---|
| **10** | 77,5 | 10 | 13 | | | | | | | |
| **15** | 77,5 | 16 | 19 | | | | | | | |
| **20** | 77,5 | 20 | 23 | | | | | | | |
| **25** | 78,5 | 26 | 29 | | | | | | | |
| **32** | 89,5 | 32 | 35 | | | | | | | |
| **40** | 89,5 | 38 | 41 | | | | | | | |
| **50** | 90,5 | 50 | 53 | | | | | | | |
| **65** | 114,5 | 66 | 70 | | | | | | | |
| **80** | 118,5 | 81 | 85 | | | | | | | |
| **100** | 121,5 | 100 | 104 | | | | | | | |

| CONVERSION TABLE | UMRECHNUNGSTABELLE | |
|---|---|---|
| DN | (inch) | (mm) |
| 8 | 1/4" | 6,35 |
| 10 | 3/8" | 9,25 |
| 15 | 1/2" | 12,7 |
| 20 | 3/4" | 19,0 |
| 25 | 1" | 25,4 |
| 32 | 1 1/4" | 31,7 |
| 40 | 1 1/2" | 38,1 |
| 50 | 2" | 51,0 |
| 65 | 2 1/2" | 63,5 |
| 80 | 3" | 76,1 |
| 100 | 4" | 104,0 |

| BAR CONVERSION CHARTS | BAR UMPRECHNUNGSTABELLE |
|---|---|
| 1 Bar | 100000 Pascals |
| | 100 Kilopascals |
| | 1000 Milibars |
| | 1000000 Microbars |
| | ~0,98 Atmospheres |
| | ~401,46 Inches of water |
| | 10 Meters of water |
| | ~29,53 Inches of mercury |
| | ~750 Milimeters of mercury |
| | ~14,5 Pounds per square inches |
| | ~1,02 Kilograms per square inches |

## MATERIALS USED

All units and parts listed in this catalogue are produced from non-corrosive acid-resistant Cr – Ni steel ČSN 17 240, which is the equivalent of the German standard DIN 1.4301. If the corrosion-proof requirements of the parts are higher they are produced from non-corrosive Cr-Ni-Mo steel ČSN 17 349 which conforms to DIN 1.4404.

### Chemical composition of the most frequently used non-corrosive steels

| ČSN PN | %C max. | %Si max. | %Mn max. | %P max. | %S max. | %Cr max. | %Mo max. | %Ni max. | %Ti max. |
|---|---|---|---|---|---|---|---|---|---|
| **17 240** | 0.07 | 1.00 | 2.00 | 0.045 | 0.030 | 17.0-20.0 | - | 9.0 -11.5 | - |
| **17 249** | 0.03 | 1.00 | 2.00 | 0.045 | 0.030 | 17.0-20.0 | - | 10.0-12.5 | - |
| **17 346** | 0.07 | 1.00 | 2.00 | 0.045 | 0.030 | 16.5-18.5 | 2.0-2.5 | 10.5-13.5 | - |
| **17349** | 0.03 | 1.00 | 2.00 | 0.045 | 0.030 | 16.5-18.5 | 2.0-2.5 | 11.0-14.0 | - |
| **17 248** | 0.10 | 1.00 | 2.00 | 0.045 | 0.030 | 17.0-19.0 | - | 9.5-12.0 | >=5xC |
| **17 348** | 0.10 | 1.00 | 2.00 | 0.045 | 0.030 | 16.5-18.5 | 2.0-2.5 | 11.0-14.0 | >=5xC |

### International standards conversion table for marking steels

| Poldi | Czech Rep. PN | Germany DIN (W. Nr.) | USA ASTM | Italy UNI | France AFNOR | Russia GOST |
|---|---|---|---|---|---|---|
| AKV7 | 17240 | 1.4301 | AISI 304 | X5CrNi1810 | Z7CN18-09 | 08Ch18N10 |
| AKV2 | 17249 | 1.4306 | AISI304L | X2CrNi1811 | Z3CN19-121 | 03Ch18N11 |
| AKV EX7 | 17346 | 1.4401 | AISI 316 | X5CrNiMo1712.2 | Z7CND17-12-02 | - |
| AKV EX2 | 17349 | 1.4404 | AISI 316L | X2CrNiMo1713.2 | Z3CND18-12-02 | 03Ch12N14M2 |
| AKVS7 | 17248 | 1.4541 | AISI 321 | X6CrNiTi1811 | Z6CNT18-10 | 08Ch18N10T |
| AKV EX S9 | 17348 | 1.4571 | AISI 316Ti | X6CrNiMoTi1712 | Z6CNDT17-12 | 08Ch17N13M2 |

## DESIGN

The bulk of products are produced from bars or forged material. The material is in such a state that after welding it is not necessary to carry out further treatment. Tubular adapting pipes in their basic finish are pickled – matt, or treated – ground (brushed).

## PIPE CONNECTING PARTS – DIN SCREW COUPLINGS

These are produced according to the DIN 11 851 standard and the screw thread according to the DIN 405 (ČSN 01 4037) standard. Connection of the sockets (screw thread or ring) to the tubes can be done in two ways:

a) butt welding
b) flaring the inside diameter

From diameters of 50 mm and above it is necessary to ensure flaring of connections with a seam weld. Flared connections with a seam weld are hygienically unobjectionable and are suitable for pressures of 1 MPa (tested at a pressure of 2 MPa). Parts which do not correspond to any standards are produced according to branch or factory standards, and possibly workshop standards, and in some cases to approved technical drawings.

## SEALING

Seals listed in this catalogue are produced from the following materials – SILICON, PERBUNAN, EPDM or VITON. They are supplied separately or as part of the set. Prices for tubular adapting pipes and sets of screw couplings do not include sealing rings.

## MAINTENANCE

Without exception the materials used are suitable for general use in the food-processing industry. These materials are sensitive to high concentrations of chloride solutions and therefore we recommend that the instructions and recom-mendations of the manufacturer are heeded. Corrosion can only be prevented if these instructions are adhered to.

## SPECIAL DESIGN

Apart from the standard parts listed in this catalogue we also supply special designs according to customer requirements and their technical documentation.

## INSTRUCTIONS FOR ORDERING

For quick and simple processing of your order please supply the following data:

| 1 | 2 | 3 | 4 |
|---|---|---|---|
| numerical labelling of goods | dimension(DN) | material | amount |

If group „3" is not listed in the order we automatically supply material 17 240 (DIN 1.4301)

If you require other parts and units than those in this catalogue please send your specific requirements.

This issue nullifies all previous catalogues and delivery conditions listed in them.

We would be pleased to discuss your specific requirements and answer your questions in person.  We look forward to your visit.

| Technical Information for Gaskets | | | | | |
|---|---|---|---|---|---|
| **Title** | **Silicon**<br>(VMQ silicon rubber) | **EPDM**<br>(ethylene-propylene-diene rubber) | **Viton**<br>(FPM fluorine rubber) | **Perbunan**<br>(NBR nitrile rubber) | **PTFE**<br>(polytetrafluorethylene) |
| Temperature of use | It is stable in water up to 100 °C<br><br>Possibility of sterilisation by steam short-term up to 120 °C to 130 °C | Permanent operating use from -40 °C to +140 °C<br><br>Possibility of sterilisation by steam up to 130 °C | Permanent operating use from -20 °C to +200 °C<br><br>Possibility of sterilisation by steam short-term up to 130 °C to 140 °C | Permanent operating use from -25 °C to +110 °C<br><br>Possibility of sterilisation by steam short-term up to 130 °C | Up to +200 °C it is physiologically harmless, use from -200 °C to +260 °C |
| Recommended use | High temperature load capacity<br><br>It has good resistance to cold, suitable for food, it has dielectric properties.<br><br>It has good resistance to alcohols. | It has good resistance to swelling for:<br><br>• Diluted inorganic and organic acids, media, oxidising media, lyes, and ketones<br><br>• Hot water and steam up to 130 °C | It has good resistance to swelling for:<br><br>• Mineral oils<br><br>• Plant and animal oils<br><br>• Lubricants (also some additives)<br><br>• Fuels | It has good resistance to swelling for:<br><br>• Aliphatic hydrocarbons (such as propane, butane, benzine, mineral oil)<br><br>• Lubricants based on mineral oil | It has good resistance to swelling in almost all parts It has a smooth and repellent surface so sticking does not occur<br><br>It has better chemical resistance than in all other elastomers Non-flammable material |
| Limited use (border) | Shows high swelling for:<br><br>• Low-molecular esters and ethers<br><br>• Aliphatic and aromatic hydrocarbons<br><br>• Concentrated acids and alkali | Cannot be used for:<br><br>• Plant and animal oils<br><br>• Aliphatic, aromatic, and chlorinated hydrocarbons<br><br>• Mineral oils | Shows high swelling for:<br><br>• Polar solvents, such as acetone, methyl ketone, ethyl acetate, diethyl ether, and dioxane<br><br>• Low-molecular organic acids (formic acid and acetic acid)<br><br>• Gaseous ammonia, amines and alkanes<br><br>• Overheated water steam | Not resistant to:<br><br>• Polar solvents<br><br>• Chlorinated hydrocarbons<br><br>• Ketones<br><br>• Aromatic hydrocarbons (benzol)<br><br>• Esters | Not resistant to:<br><br>• Liquid alkaline metals and some compounds of fluorine in connection with higher pressure and temperature<br><br>The material does not show the flexibility of rubber. |
| Material approval | BGA/FDA | BGA/FDA | BGA/FDA | BGA/FDA | BGA/FDA |

BGA = approval of the "Federal Health Authority" in Germany ("Bundesgesundheitsamt")
FDA = approval of the "US Food and Drug Administration"

| Technische Informationen für Dichtringe | | | | | |
|---|---|---|---|---|---|
| **Name** | **Silikon**<br>(VMQ) | **EPDM**<br>(Ethylen-Propylen-Dien-Kautschuk) | **Viton**<br>(FPM) | **Perbunan**<br>(NBR) | **PTFE**<br>(Polytetrafloutäthylen) |
| Einsatztemperatur | in Wasser bis 100 °C beständig<br><br>Dampfsterilisierbar kurzfristig bis 120 °C - 130 °C | Dauereinsatz von minus 40 °C bis 140 °C<br><br>Dampfsterilisierbar bis 130 °C | Dauereinsatz von minus 20 °C bis 200 °C<br><br>Dampfsterilisierbar kurzfristig bis 130 °C - 140 °C | Dauereinsatz von minus 25 °C bis 110 °C<br><br>Dampfsterilisierbar kurzfristig bis 130 °C | bis 200 °C physiologisch unbedenklich,<br><br>Einsatz von -200 °C bis +260 °C |
| typ. Einsatzbereich | hohe thermische Belastbarkeit<br><br>gute Kältebeständigkeit, für lebensmittel gut geeignet, dielektrische Eigensohaften<br><br>gute Beständigkeit gegenüber Alkoholen | gute Quellbeständigkeit bei:<br><br>• verdünnte anorg.- und organische Säuren, Medien, oxidierend wirkende Medien, Laugen und Kentonen<br><br>• in Heißwasser und Dampf bis 130 °C | gute Quellbeständigkeit bei:<br><br>• Mineralölen<br><br>• pflanzlichen und tierischen Olen<br><br>• Fetten (auch bestimmte Additive)<br><br>• Kraftstoffe | gute Quellbeständigkeit<br><br>• aliphatisohen Kohlenwasserstoffen (wie Propan, Butan, Benzin, Mineralölen)<br><br>• Fett auf Mineralolbasis | gute Quellbeständigkeit in nahezu allen Teilen<br><br>Oberfläche glatt und abweisend, dadurch kein Haften von Růckständen<br><br>chemische Beständigkeit besser als bei allen anderen Elastomeren<br><br>kaum brennbar |
| Einsatzgrenzen | hohe Quellung bei:<br><br>• niedermolekularen Estem und Ethern<br><br>• aliphatischen und aromatischen Kohlenwasserstoffen<br><br>• konz. Säuren und Akalien | nicht einzusetzen bei:<br><br>• pflanzlichen und tierischen Olen<br><br>• aliphatischen aromatischen und chlorierten kohlenwasserstoffen<br><br>• Mineralöle | stark quellend bei:<br><br>• polaren Lösungsmitteln wie Aceton, Methylketon, Ethylacetat, Diethylether u. Dioxane<br><br>• niedermolekularen organ. Säuren (Ameisen - und Essigsäuren)<br><br>• Ammoniakgase, Amine u. Alkanien<br><br>• überhitzter Wasserdampf | nicht beständig bei:<br><br>• polaren Lösungsmitteln<br><br>• chlorierten Kohlenwasserstoffen<br><br>• Ketone<br><br>• Aromaten (Benzol)<br><br>• Ester | nicht beständig bei:<br><br>• flůssigen Alkalimetallen und einigen Flourverbindungen in Verbindung mit hohem Druck und Temperatur<br><br>kein gummielastischer Werkstoff |
| Werkstoffzulassung | BGA/FDA | BGA/FDA | BGA/FDA | BGA/FDA | BGA/FDA |

BGA = Bundesgesundheitsamt
FDA = US Food and Drug Administration

NIOB FLUID

PRODUCER OF STAINLESS PIPPING SYSTEMS

HERSTELLER VON EDELSTAHLARMATUREN

**NIOB FLUID s. r. o.**
Ostrožská 1003
687 25 Hluk
Czech Republic

Phone: +420 572 419 822 – 8
Fax: +420 572 419 868
E-mail: marketing@niobfluid.cz

www.niobfluid.cz