NIOB FLUID

04

PRODUCER OF STAINLESS PIPPING SYSTEMS

HERSTELLER VON EDELSTAHLARMATUREN

VALVES AND COCKS

VENTILE UND HÄHNE

www.niobfluid.cz

04/2026

Catalogue NIOB FLUID
Katalog NIOB FLUID

02 PIPE UNIONS
ROHRVERBINDUNGEN

03 FITTINGS
ROHRFORMSTÜCKE

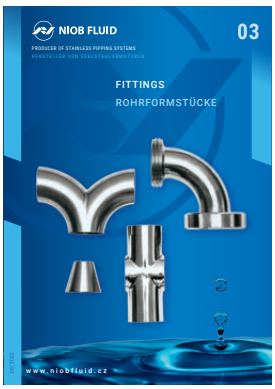

04 VALVES AND COCKS
VENTILE UND HÄHNE

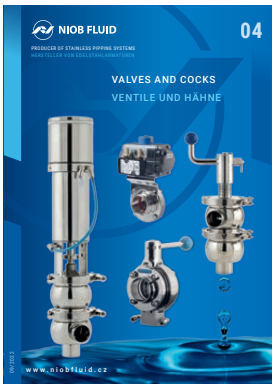

05 SPECIAL FITTINGS AND PARTS
SPEZIALARMATUREN UND TEILE

06 DOORS AND MANWAYS
MANNLOCHTÜREN UND KLAPPTÜREN

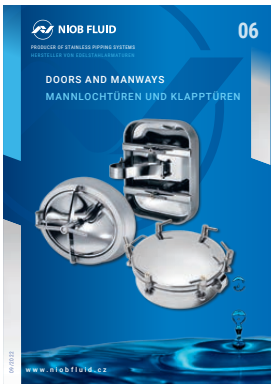

07 ACCESSORIES
ZUBEHÖR

08 DOUBLE-WALLED PIPING SYSTEMS
DOPPELWANDIGE ROHRSYSTEME

09 ASEPTIC PROGRAM
ASEPTISCHES PROGRAMM

Current versions of catalogs at www.niobfluid.cz • Aktuelle Katalogversionen unter www.niobfluid.cz

The company NIOB FLUID s. r. o. is a manufacturer focused on the production of fasteners, shut-off and control valves of stainless steels. These valves are especially designed for the transport of liquids in the food, chemical and the pharmaceutical industry. It is simultaneously also the supplier of pipe fittings and other parts needed for piping systems and components for tanks such as the lid, manwaydoor, level indicator and other components.

Die Gesellschaft NIOB FLUID s.r.o. ist ein Hersteller, der auf die Produktion von Verbindungs-, Absperr- und Regulierungsarmaturen aus Edelstahl orientiert ist. Diese Armaturen sind vor allem für den Transport von Flüssigkeiten in der Lebensmittel- und Chemieindustrie und in der Pharmazie bestimmt. Die Gesellschaft ist gleichzeitig auch Lieferant von Rohrverbindungsstücken und weiteren Teilen, die für die Rohrleitungen erforderlich sind, und von Behälterteilen wie Hauben, Luken, Standgläser und weiteren Komponenten.

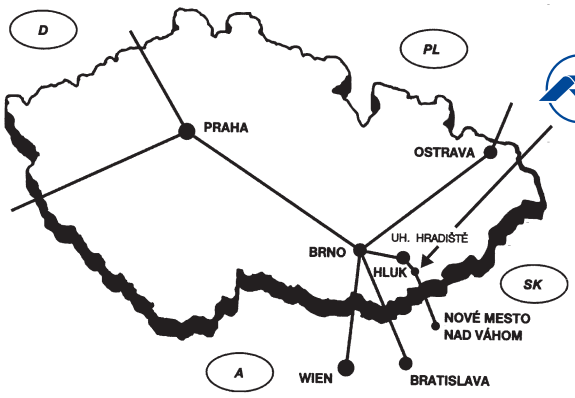

NIOB FLUID

NIOB FLUID

NIOB FLUID s. r. o.
Ostrožská 1003, 687 25 Hluk, Czech Republic
Ghone: +420 572 419 822 – 8, Fax: +420 572 419 868
E-mail: marketing@niobfluid.cz, www.niobfluid.cz

Three way cock G - G - G
Dreiwegekükenhahn G - G - G

40110

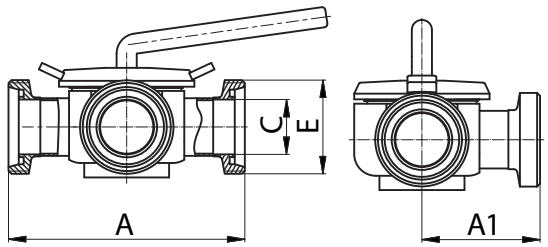

Dimensions • Baumaße

DN	A	C	A1	E	F	R	L	Rd x s	kg
				DIN 405					
40	184,5	38	92,2	65x1/6"					
50	231,5	50	115,8	78x1/6"					

Three way cock S - S - S
Dreiwegekükenhahn S - S - S

40111

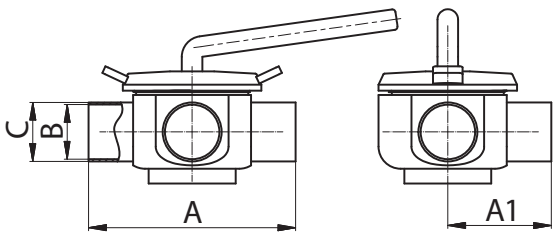

Dimensions • Baumaße

DN	A	A1	B	C	E	F	R	L	Rd x s	kg
40	140,5	70,2	38	41						
50	185,5	92,8	50	53						

Three way cock C - C - C
Dreiwegekükenhahn C - C - C

40119

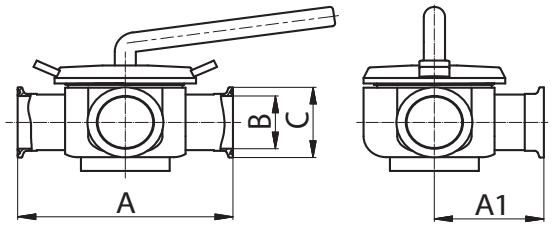

Dimensions • Baumaße

DN	A	A1	B	C	E	F	R	L	Rd x s	kg
40	165,9	82,9	38	50,5						
50	210,9	105,5	50	64						

Three way ball valve G - G - G
Dreiwegekugelventil G - G - G

40210

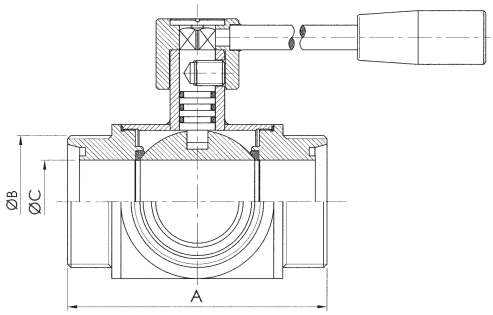

Dimensions • Baumaße

DN	A	B	C	E	E	F	R	L	Rd x s	kg
		DIN 405								
25	136	52x1/6"	25							
32	138	58x1/6"	31							
40	158	65x1/6"	37							
50	170	78x1/6"	49							
65	204	95x1/6"	66							
80	130	110x1/4"	81							
100	264	130x1/4"	100							
125	346	160x1/4"	120							

Three way ball valve PN - PN - PN
Dreiwegekugelventil PN - PN - PN

40240

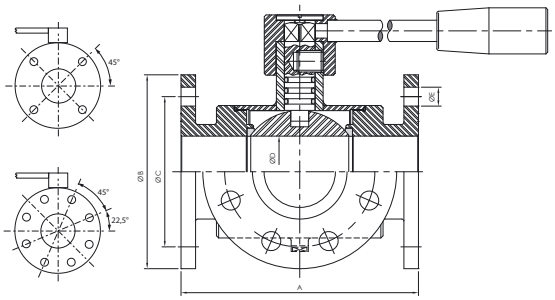

Dimensions • Baumaße

DN	A	B	C	D	E	F	R	L	Rd x s	kg
25	150	115	85	25	14x4					
32	180	140	100	31	18x4					
40	200	150	110	37	18x4					
50	220	165	125	49	18x4					
65	240	185	145	66	18x4					
80	260	200	160	81	18x8					
100	300	220	180	100	18x8					
125	380	250	210	120	18x8					

Straight way ball valve S - S
Kugelventil S - S

40510

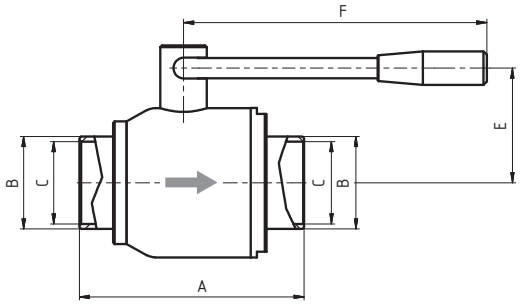

Dimensions • Baumaße

DN	A	B	C	E	F	G	R	L	Rd x s	kg
15	78	21	16	40	90					
20	78	25	20	40	90					
25	84	31	26	44	146					
32	106	37	32	50	146					
40	124	43	40	64	185					
50	134	55	49	68	185					
65	145	72	65	95	243					
80	179	87	79	104	243					
100	205	106	99	122	273					
125	225	132	119	135	273					

Straight way ball valve S - G
Kugelventil S - G

40520

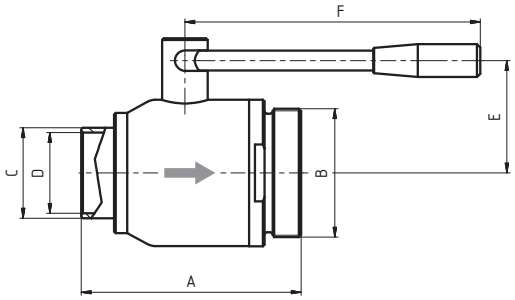

Dimensions • Baumaße

DN	A	B	C	D	E	F	R	L	Rd x s	kg
		DIN 405								
25	86	52x1/6"	31	26	44	146				
32	104	58x1/6"	37	32	50	146				
40	125	65x1/6"	43	40	64	185				
50	134	78x1/6"	55	49	68	185				
65	145	95x1/6"	72	65	95	243				
80	179	110x1/4"	87	79	104	243				
100	205	130x1/4"	106	99	122	273				
125	225	160x1/4"	132	119	135	273				

Straight way ball valve G - G
Kugelventil G - G

40530

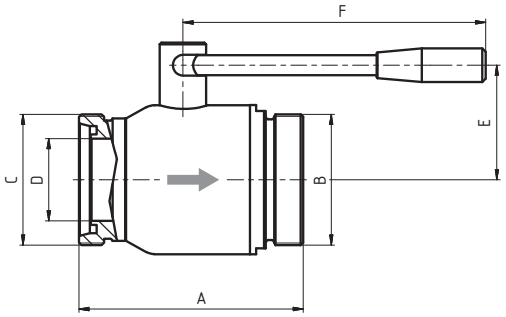

Dimensions • Baumaße

DN	A	B/C	D	E	F		R	L	Rd x s	kg
		DIN 405								
25	89	52x1/6"	26	44	146					
32	113	58x1/6"	32	50	146					
40	124	65x1/6"	40	64	185					
50	134	78x1/6"	49	68	185					
65	146	95x1/6"	65	95	243					
80	179	110x1/4"	79	104	243					
100	205	130x1/4"	99	122	273					
125	225	160x1/4"	119	135	273					

Straight way ball valve S - K/M
Kugelventil S - K/M

40540 **Dimensions** • Baumaße

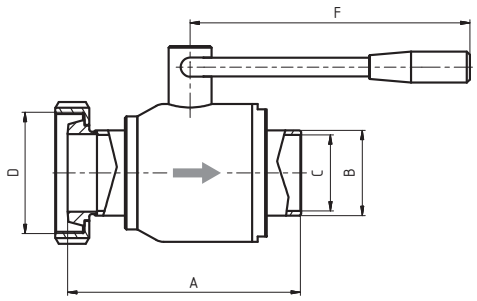

DN	A	B	C	D	E	F	R	L	Rd x s	kg
				DIN 405						
25	100	31	26	52x1/6"	44	146				
32	122	37	32	58x1/6"	50	146				
40	140	43	40	65x1/6"	64	185				
50	151	55	49	78x1/6"	68	185				
65	164	72	65	95x1/6"	95	243				
80	198	87	79	110x1/4"	104	243				
100	228	106	99	130x1/4"	122	273				
125	250	132	119	160x1/4"	135	273				

Straight way ball valve G - K/M
Kugelventil G - K/M

40550 **Dimensions** • Baumaße

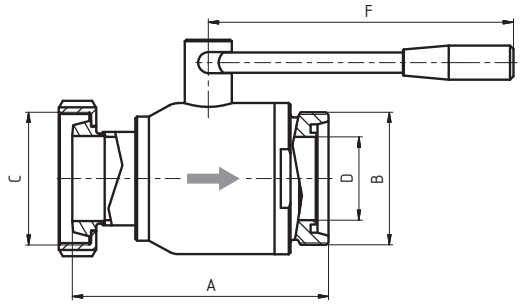

DN	A	B/C	D	E	F	G	R	L	Rd x s	kg
		DIN 405								
25	102	52x1/6"	26	44	146					
32	120	58x1/6"	32	50	146					
40	141	65x1/6"	40	64	185					
50	151	78x1/6"	49	68	185					
65	164	95x1/6"	65	95	243					
80	198	110x1/4"	79	104	243					
100	228	130x1/4"	99	122	273					
125	250	160x1/4"	119	135	273					

Straight way ball valve K/M - K/M
Kugelventil K/M - K/M

40560 **Dimensions** • Baumaße

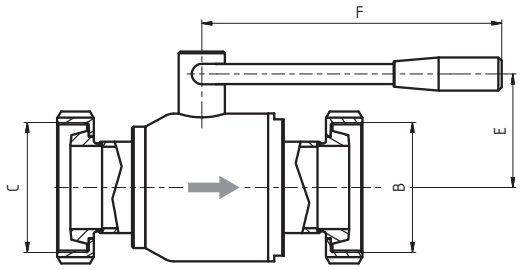

DN	A	B/C	D	E	F	F	R	L	Rd x s	kg
		DIN 405								
25	119	52x1/6"	26	44	146					
32	138	58x1/6"	32	50	146					
40	156	65x1/6"	38	64	185					
50	168	78x1/6"	50	68	185					
65	183	95x1/6"	66	95	243					
80	217	110x1/4"	81	104	243					
100	251	130x1/4"	100	122	273					
125	275	160x1/4"	121	135	273					

Straight way ball valve G - PN
Kugelventil G - PN

40570 **Dimensions** • Baumaße

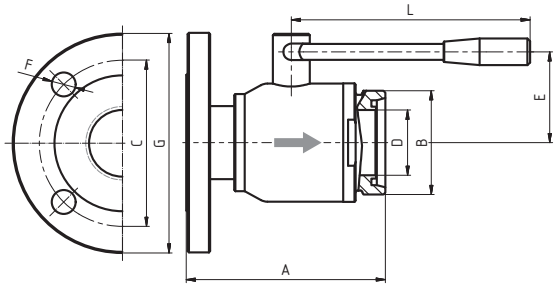

DN	A	B	C	D	E	F	G	L	Rd x s	kg
		DIN 405								
25	98	52x1/6"	85	26	44	14x4	115	146		
32	116	58x1/6"	100	32	50	18x4	140	146		
40	137	65x1/6"	110	40	64	18x4	150	185		
50	146	78x1/6"	125	49	68	18x4	165	185		
65	157	95x1/6"	145	65	95	18x4	185	243		
80	193	110x1/4"	160	79	104	18x4	200	243		
100	219	130x1/4"	180	99	122	18x8	220	273		
125	243	160x1/4"	210	119	135	18x8	250	273		

Two pieces ball cock G - G
2-Teiling-Kugelhahn G - G

40640 **Dimensions** • Baumaße

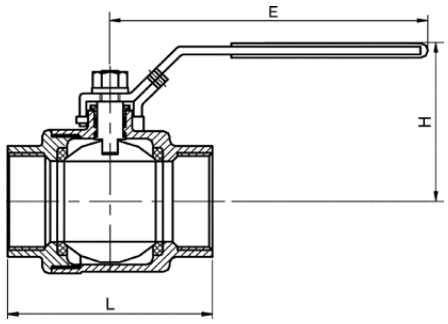

DN	L	E	H	D	E	F	R	L	Rd x s	kg
1/4"	52	90	55							
3/8"	52	90	55							
1/2"	55	105	55							
3/4"	65	115	60							
1"	72	120	70							
1 1/4"	83	145	75							
1 1/2"	95	175	90							
2"	110	175	100							
2 1/2"	144	210	130							
3"	170	230	140							

Three pieces ball cock S - S
3-Teiling-Kugelhan S - S

40650 **Dimensions** • Baumaße

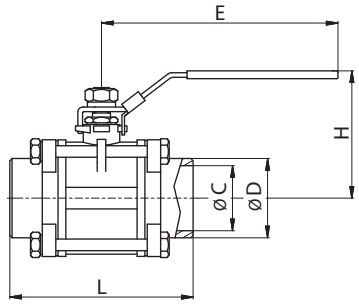

DN	L	E	H	C	D	F	R	L	Rd x s	kg
8	63	95	46	11	17					
10	63	95	50	12	17					
15	75	103	56	15	21,3					
20	80	118	66	20	26,7					
25	90	135	72	25	33,4					
32	110	135	83	32	42,2					
40	120	160	88	38	48,3					
50	140	173	100	50	60,3					
65	165	216	127	65	74					
80	202	232	138	80	91					
100	252	330	171	100	110					

Three pieces ball cock S - S for orbital welding
3-Teiling-Kugelhan S - S für Orbital Schweißen

40660 **Dimensions** • Baumaße

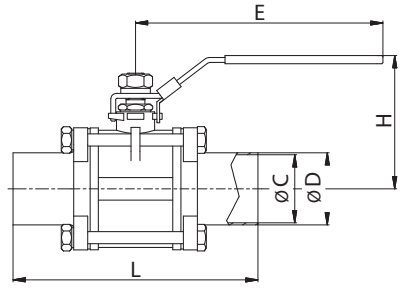

DN	L	E	H	C	D	F	R	G	Rd x s	kg
10	100	95	50	10	13					
15	125	103	56	16	19					
20	130	118	66	20	23					
25	140	135	72	26	29					
32	168	135	83	32	35					
40	178	160	88	38	41					
50	200	173	100	50	53					
65	245	216	127	66	70					
80	282	232	138	81	85					
100	332	330	171	100	104					
100	332	330	171	100	110					

Three pieces ball cock G - G
3-Teiling-Kugelhan G - G

40670 **Dimensions** • Baumaße

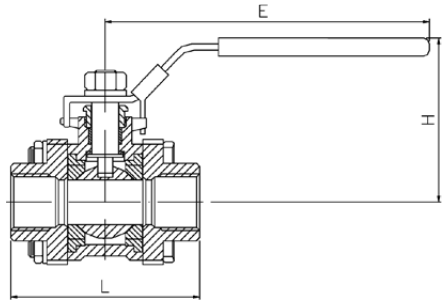

DN	L	E	H	D	E	F	R	G	Rd x s	kg
1/4"	51	95	46							
3/8"	65	95	50							
1/2"	74	103	56							
3/4"	70	118	66							
1"	89	135	72							
1 1/4"	108	135	83							
1 1/2"	108	160	88							
2"	140	173	100							
2 1/2"	168	216	127							
3"	190	232	138							
4"	240	330	171							

Three pieces ball cock S - S with AT SR 4405 (or DA 4410)
3-Teiling-Kugelhahn S - S mit AT SR 4405 (oder DA 4410)

40650 P05
40650 P10

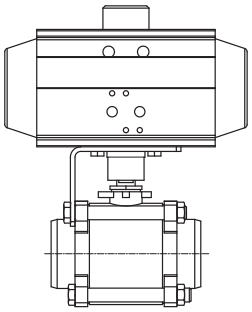

Dimensions • Baumaße

DN	B	C	C	D	E	F	G	R	Rd x s	kg
10										
15										
20										
25										
32										
40										
50										
65										
80										
100										

Bracket
Konsole für Kugelhahn

40770

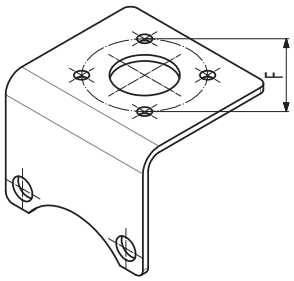

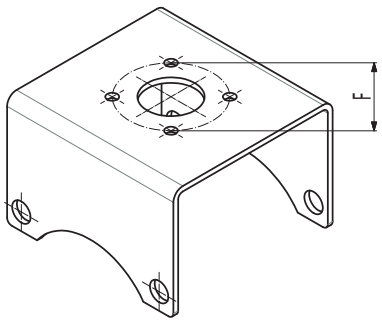

Dimensions • Baumaße

DN	A	B	E	F	G	R	L	Rd x s	kg
10				F04					
15				F04					
20				F04					
25				F04					
25				F05					
32				F04					
32				F05					
40				F04					
40				F05					
50				F05 / F07					
65				F07					
80				F07					
100				F07					

Catch driver for 3-pieces ball cock
Kupplung für 3-Teiling-Kugelhahn

40780

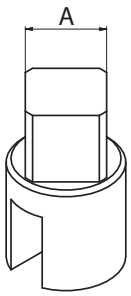

Dimensions • Baumaße

A	B	C	D	E	F	G	R	L	Rd x s	kg
11x11										
14x14										
17x17										
22x22										

Three pieces ball cock PN - PN
3-Teiling-Kugelhahn PN - PN

40742 (20700)

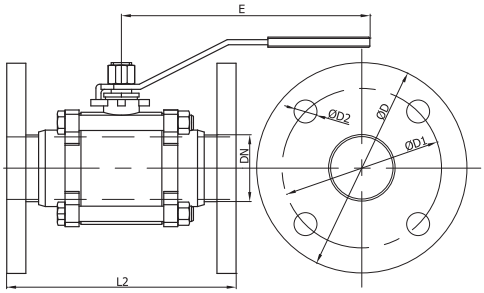

Dimensions • Baumaße

DN	D	D1	D2	L2	E	H	A	B	Rd x s	kg
25	115	85	14x4	162	135	72				
32	140	100	18x4	186	135	83				
40	150	110	18x4	200	160	88				
50	165	125	18x4	226	173	100				
65	185	145	18x4	251	216	127				
80	200	160	18x8	301	232	138				
100	220	180	18x8	351	330	171				

Flange PN 10
Flansch PN 10 DIN 2576

20700

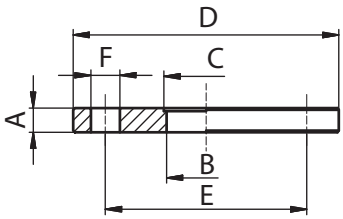

Dimensions • Baumaße

DN	A	B	C	D	E	F	G	L	Rd x s	kg
10	14	10	12,2	90	60	14x4				0,5
15	14	16	18,2	95	65	14x4				0,6
20	16	20	22,2	105	75	14x4				0,85
25	16	26	28,2	115	85	14x4				1,11
32	16	32	34,2	140	100	18x4				1,64
40	16	38	40,2	150	110	18x4				1,8
50	18	50	52,2	165	125	18x4				2,3
65	18	66	70,3	185	145	18x4				2,88
80	20	81	85,3	200	160	18x8				3,2
100	20	100	104,3	220	180	18x8				4
125	22	125	129,5	250	210	18x8				5
150	22	150	154,5	285	240	22x8				6,7

Three pieces ball cock PN - PN
3-Teiling-Kugelhahn PN - PN

40743 (20730)

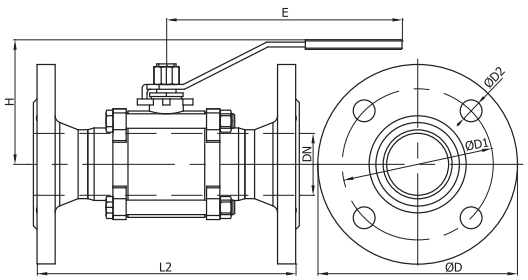

Dimensions • Baumaße

DN	D	D1	D2	L2	E	H	A	B	Rd x s	kg
25	115	85	14x4	162	135	72				
32	140	100	18x4	186	135	83				
40	150	110	18x4	200	160	88				
50	165	125	18x4	226	173	100				
65	185	145	18x4	251	216	127				
80	200	160	18x8	301	232	138				
100	220	180	18x8	351	330	171				

Flange PN 16
Flansch PN 16

20730

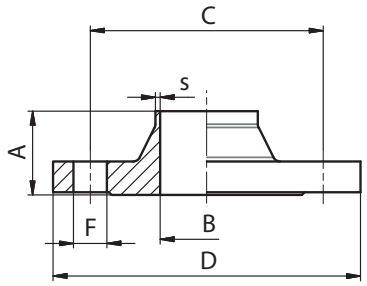

Dimensions • Baumaße

DN	A	B	C	D	F	s	K	L	Rd x s	kg
10	35	10	60	90	14x4	1,5				0,58
15	35	16	65	95	14x4	1,5				0,65
20	38	20	75	105	14x4	1,5				0,95
25	38	26	85	115	14x4	1,5				1,14
32	40	32	100	140	18x4	1,5				1,6
40	42	38	110	150	18x4	1,5				1,8
50	45	50	125	165	18x4	1,5				2,53
65	45	66	145	185	18x4	2				3,06
80	50	81	160	200	18x8	2				3,7
100	52	100	180	220	18x8	2				4,62
125	55	125	210	250	18x8	2				6,3
150	55	150	240	285	22x8	2				7,75

Straight way ball valve S - S
Kugelventil S - S

41101 **Dimensions** • Baumaße

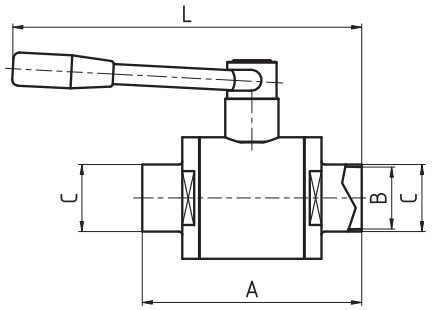

DN	A	B	C	D	E	F	R	L	Rd x s	kg
25	103	25	28					172		
32	124	32	34					214		
40	131	38	40					218		
50	138	48	52					226		
65	170	65	70					298		
80	181	73	85					304		

Straight way ball valve G - S
Kugelventil G - S

41102 **Dimensions** • Baumaße

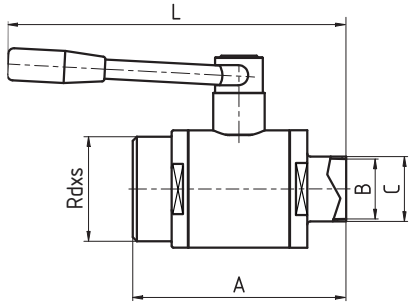

DN	A	B	C	D	E	F	R	L	Rd x s	kg
25	103	25	28					172	52x1/6"	
32	124	32	34					214	58x1/6"	
40	131	38	40					218	65x1/6"	
50	138	48	52					226	78x1/6"	
65	170	65	70					298	95x1/6"	
80	181	73	85					304	110x1/4"	

Straight way ball valve G - G
Kugelventil G - G

41103 **Dimensions** • Baumaße

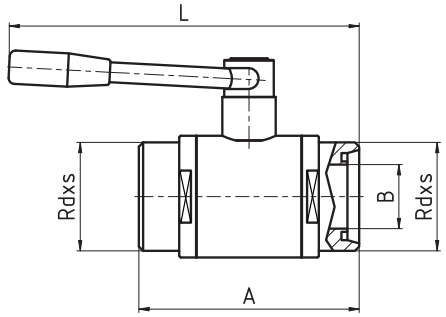

DN	A	B	C	D	E	F	R	L	Rd x s	kg
25	103	25						172	52x1/6"	
32	124	32						214	58x1/6"	
40	131	38						218	65x1/6"	
50	138	48						226	78x1/6"	
65	170	65						298	95x1/6"	
80	181	73						304	110x1/4"	

Straight way ball valve K/M - S
Kugelventil K/M - S

41104 **Dimensions** • Baumaße

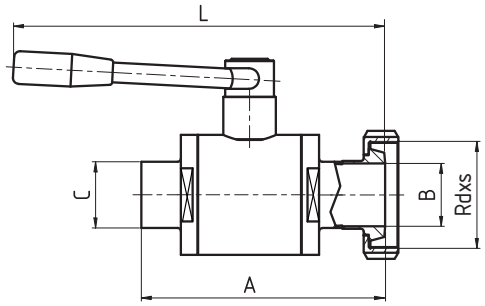

DN	A	B	C	D	E	F	R	L	Rd x s	kg
25	121	25	28					190	52x1/6"	
32	142	32	34					232	58x1/6"	
40	149	38	40					236	65x1/6"	
50	157	48	52					245	78x1/6"	
65	191	65	70					319	95x1/6"	
80	202	73	85					325	110x1/4"	

Straight way ball valve K/M - G
Kugelventil K/M - G

41105

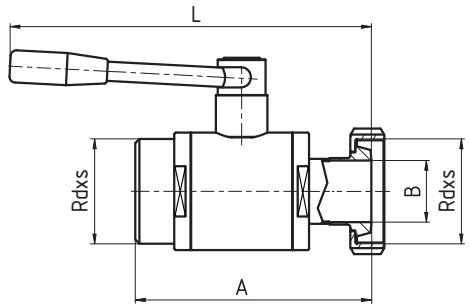

Dimensions • Baumaße

DN	A	B	C	D	E	F	R	L	Rd x s	kg
25	121	25						190	52x1/6"	
32	142	32						232	58x1/6"	
40	149	38						236	65x1/6"	
50	157	48						245	78x1/6"	
65	191	65						319	95x1/6"	
80	202	73						325	110x1/4"	

Straight way ball valve K/M - K/M
Kugelventil K/M - K/M

41106

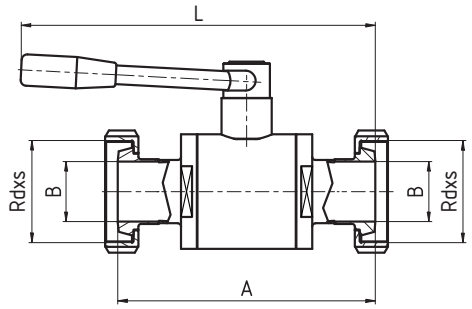

Dimensions • Baumaße

DN	A	B	C	D	E	F	R	L	Rd x s	kg
25	147	25						194	52x1/6"	
32	174	32						239	58x1/6"	
40	183	38						244	65x1/6"	
50	194	48						254	78x1/6"	
65	234	65						330	95x1/6"	
80	255	73						341	110x1/4"	

Butterfly valve S - S
Scheibenventil S - S

42010 **Dimensions** • Baumaße

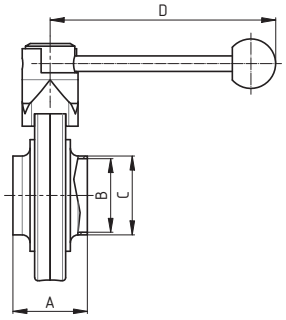

INCH	DN	A	B	C	D	E	D2	R	L	Rd x s	kg
	1"	38	22,1	25,4	114						
	1 1/2"	48	34,8	38,1	140						
	2"	48	47,5	50,8	140						
	2 1/2"	48	60,2	63,5	140						
	3"	60	72,1	76,1	174						
	4"	62	97,5	101,6	174						

Butterfly valve G - S
Scheibenventil G - S

42020 **Dimensions** • Baumaße

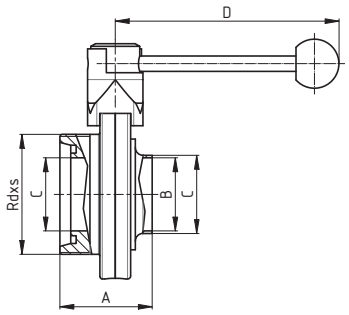

INCH	DN	A	B	C	D	E	F	D2	L	Rd x s	kg
	1"	51	22,1	25,4	114					52x1/6"	
	1 1/2"	60	34,8	38,1	140					65x1/6"	
	2"	60	47,5	50,8	140					78x1/6"	
	2 1/2"	62	60,2	63,5	140					95x1/6"	
	3"	75	72,1	76,1	174					104x1/6"	
	4"	83	97,5	101,6	174					130x1/4"	

Butterfly valve G - G
Scheibenventil G - G

42030 **Dimensions** • Baumaße

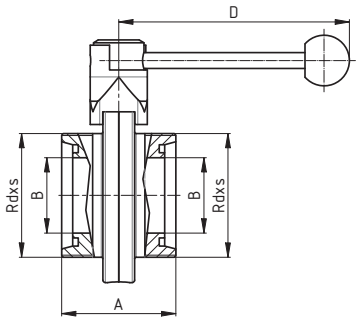

INCH	DN	A	B	D	E	F	F	R	L	Rd x s	kg
	1"	64	22,1	114						52x1/6"	
	1 1/2"	72	34,8	140						65x1/6"	
	2"	72	47,5	140						78x1/6"	
	2 1/2"	76	60,2	140						95x1/6"	
	3"	90	72,1	174						104x1/6"	
	4"	104	97,5	174						130x1/4"	

Butterfly valve G - K/M
Scheibenventil G - K/M

42040 **Dimensions** • Baumaße

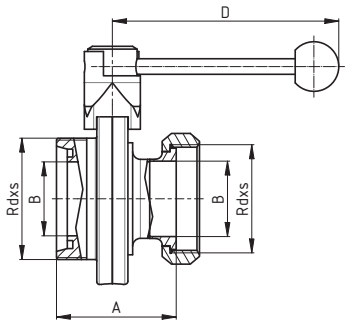

INCH	DN	A	B	D	C1	E	R	L	Rd x s	kg
	1"	66,5	22,1	114					52x1/6"	
	1 1/2"	76	34,8	140					65x1/6"	
	2"	77	47,5	140					78x1/6"	
	2 1/2"	79	60,2	140					95x1/6"	
	3"	94	72,1	174					104x1/6"	
	4"	102	97,5	174					130x1/4"	

Butterfly valve S - S
Scheibenventil S - S

43010 — **Dimensions** • Baumaße

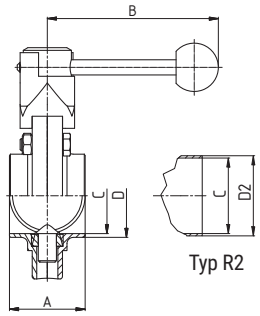

DIN	DN	A	B	C	D	E	D2	R	L	Rd x s	kg
	15	50,8		16	19						
	20	50,8		20	23						
	25	40	114	26	31		29				
	32	42	114	32	37		32				
	40	50	140	38	43		41				
	50	50	140	50	55		53				
	65	50	140	66	72		70				
	80	60	174	81	87		85				
	100	64	174	100	106		104				
	125	100	210	125	138		129				
	150	100	210	150	164		154				

Butterfly valve G - S
Scheibenventil G - S

43020 — **Dimensions** • Baumaße

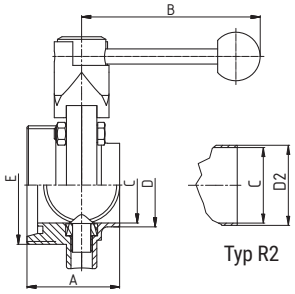

DIN	DN	A	B	C	D	E	F	D2	L	Rd x s	kg
						DIN 405					
	15	58,4		16	19	34x1/8"					
	20	58,4		20	23	44x1/6"					
	25	52	114	26	31	52x1/6"		29			
	32	53	114	32	37	58x1/6"		32			
	40	61	140	38	43	65x1/6"		41			
	50	61	140	50	55	78x1/6"		53			
	65	63	140	66	72	95x1/6"		70			
	80	80	174	81	87	110x1/4"		85			
	100	84	174	100	106	130x1/4"		104			
	125	106	210	125	138	160x1/4"		129			
	150	112	210	150	164	190x1/4"		154			

Butterfly valve G - G
Scheibenventil G - G

43030 — **Dimensions** • Baumaße

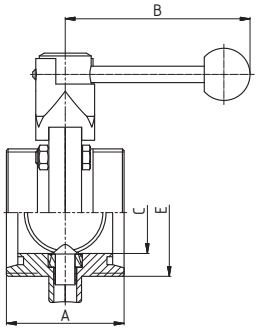

DIN	DN	A	B	C	E	F	F	R	L	Rd x s	kg
					DIN 405						
	15	66		16	34x1/8"						
	20	66		20	44x1/6"						
	25	64	114	26	52x1/6"						
	32	64	114	32	58x1/6"						
	40	72	140	38	65x1/6"						
	50	72	140	50	78x1/6"						
	65	76	140	66	95x1/6"						
	80	100	174	81	110x1/4"						
	100	104	174	100	130x1/4"						
	125	112	210	125	160x1/4"						
	150	124	210	150	190x1/4"						

Butterfly valve G - K/M
Scheibenventil G - K/M

43040 — **Dimensions** • Baumaße

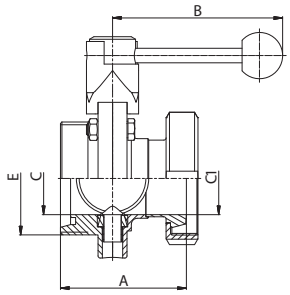

DIN	DN	A	B	C	C1	E	R	L	Rd x s	kg
						DIN 405				
	25	72	114	26	26	52x1/6"				
	32	76	114	32	32	58x1/6"				
	40	85	140	38	38	65x1/6"				
	50	87	140	50	50	78x1/6"				
	65	93	140	66	66	95x1/6"				
	80	115	174	81	81	110x1/4"				
	100	126	174	100	100	130x1/4"				
	125	138	210	125	125	160x1/4"				
	150	147	210	150	150	190x1/4"				

Butterfly valve K/M - S
Scheibenventil K/M - S

43050 **Dimensions** • Baumaße

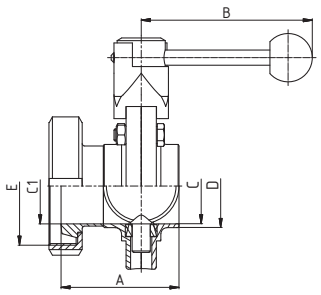

DIN	DN	A	B	C	C1	D	E	D2	Rd x s	kg
							DIN 405			
	25	60	114	26	26	31	52x1/6"			
	32	65	114	32	32	37	58x1/6"			
	40	74	140	38	38	43	65x1/6"			
	50	76	140	50	50	55	78x1/6"			
	65	80	140	66	66	72	95x1/6"			
	80	95	174	81	81	87	110x1/4"			
	100	106	174	100	100	106	130x1/4"			
	125	132	210	125	125	138	160x1/4"			
	150	135	210	150	150	164	190x1/4"			

Butterfly valve K/M - K/M
Scheibenventil K/M - K/M

43060 **Dimensions** • Baumaße

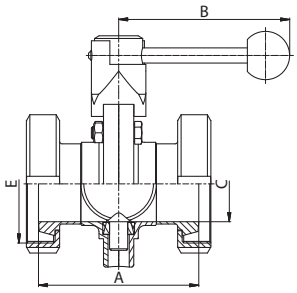

DIN	DN	A	B	C	E	F	G	R	L	Rd x s	kg
					DIN 405						
	25	80	114	26	52x1/6"						
	32	88	114	32	58x1/6"						
	40	98	140	38	65x1/6"						
	50	102	140	50	78x1/6"						
	65	110	140	66	95x1/6"						
	80	130	174	81	110x1/4"						
	100	148	174	100	130x1/4"						
	125	164	210	125	160x1/4"						
	150	170	210	150	190x1/4"						

Butterfly valve PN - G
Scheibenventil PN - G

4307B **Dimensions** • Baumaße

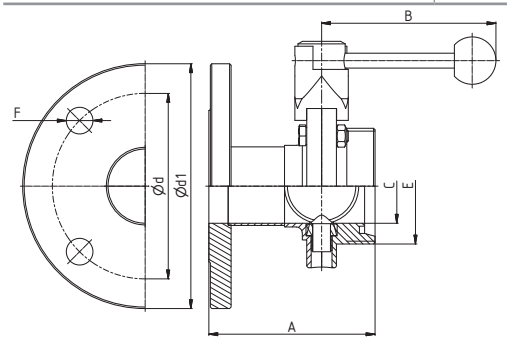

DIN	DN	A	B	C	E	d	d1	F	L	Rd x s	kg
					DIN 405						
	25	106	114	26	52x1/6"	85x4	115	14			
	32	106	114	32	58x1/6"	100x4	140	18			
	40	110	140	38	65x1/6"	110x4	150	18			
	50	112	140	50	78x1/6"	125x4	165	18			
	65	122	140	66	95x1/6"	145x4	185	18			
	80	135	174	81	110x1/4"	160x8	200	18			
	100	140	174	100	130x1/4"	180x8	220	18			

Butterfly valve PN - PN
Scheibenventil PN - PN

43080 **Dimensions** • Baumaße

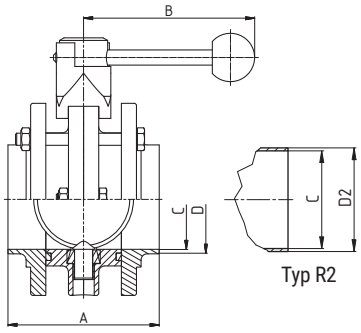

DIN	DN	A	B	C	D	E	D2	R	L	Rd x s	kg
	25	84	114	26	31		29				
	32	86	114	32	37		32				
	40	100	140	38	43		41				
	50	100	140	50	55		53				
	65	100	140	66	72		70				
	80	120	174	81	87		85				
	100	146	174	100	106		104				
	125	168	210	125	138		129				
	150	188	210	150	164		154				

Compact flange butterfly valve PN - PN
Kompaktzwischenflansch-Scheibenventil PN - PN

43081 — **Dimensions** • Baumaße

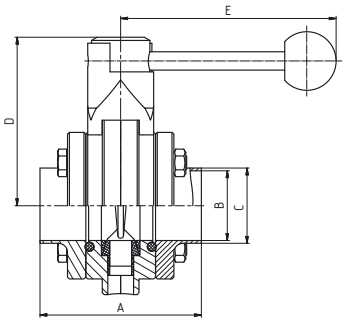

DIN	DN	A	B	C	D	E	F	R	L	Rd x s	kg
	25	78	26	31	87	117					
	32	78	32	37	90	117					
	40	88	38	43	92	126					
	50	88	50	53	98,5	126					
	65	88	66	72	107,5	126					
	80	120	81	87	120	153					
	100	124	100	106	130	153					
	125	140	125	132	160	205					
	150	160	150	157	175	205					

Butterfly valve C - C
Scheibenventil C - C

43090 — **Dimensions** • Baumaße

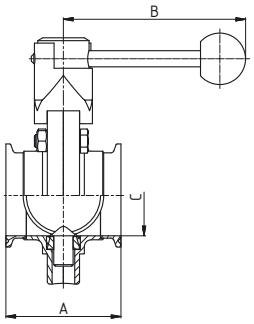

DIN	DN	A	B	C	D	E	F	R	L	Rd x s	kg
	25	79	114	26							
	32	81	114	32							
	40	89	140	38							
	50	89	140	50							
	65	102	140	66							
	80	112	174	81							
	100	116	174	100							

Butterfly valve S - C
Scheibenventil S - C

43101 — **Dimensions** • Baumaße

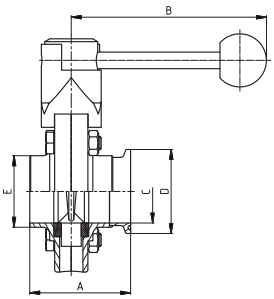

DIN	DN	A	B	C	D	E	F	R	L	Rd x s	kg
	25	59,5	114	26	50,5	31					1,3
	32	61,5	114	32	50,5	37					1,4
	40	69,5	140	38	50,5	43					1,6
	50	69,5	140	50	64	55					1,8
	65	76	140	66	91	72					2,2
	80	86	174	81	106	87					3,9
	100	90	174	100	119	106					4,6

Tee with one butterfly valve G - G - G
Mehrwege-Scheibenventil G - G - G

43110 — **Dimensions** • Baumaße

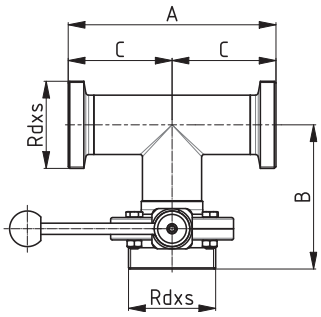

DIN	DN	A	B	C	E	F	F	R	L	Rd x s	kg
	25	144	100	72						52x1/6"	
	32	154	106	77						58x1/6"	
	40	164	119	82						65x1/6"	
	50	186	129	93						78x1/6"	
	65	210	141	105						95x1/6"	
	80	230	168	115						110x1/4"	
	100	260	182	130						130x1/4"	
	125	446	291,5	223						160x1/4"	
	150	530	335	265						190x1/4"	

Tee with one butterfly valve G - G - G
Mehrwege-Scheibenventil G - G - G

43120 **Dimensions** • Baumaße

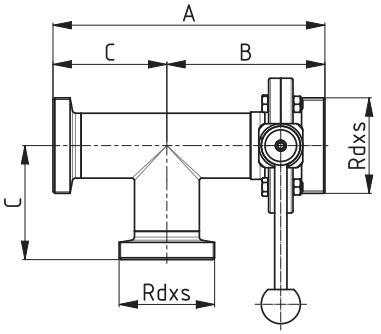

DIN	DN	A	B	C	E	F	G	R	L	Rd x s	kg
	25	172	100	72						52x1/6"	
	32	183	106	77						58x1/6"	
	40	201	119	82						65x1/6"	
	50	222	129	93						78x1/6"	
	65	246	141	105						95x1/6"	
	80	283	168	115						110x1/4"	
	100	312	182	130						130x1/4"	
	125	514,5	291,5	223						160x1/4"	
	150	600	335	265						190x1/4"	

Tee with one butterfly valve G - G - G
Mehrwege-Scheibenventil G - G - G

43130 **Dimensions** • Baumaße

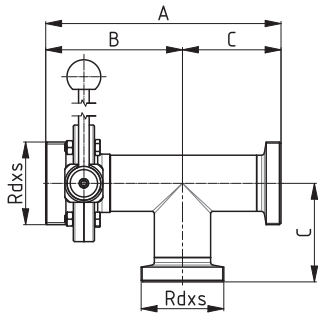

DIN	DN	A	B	C	E	F	G	R	L	Rd x s	kg
	25	172	100	72						52x1/6"	
	32	183	106	77						58x1/6"	
	40	201	119	82						65x1/6"	
	50	222	129	93						78x1/6"	
	65	246	141	105						95x1/6"	
	80	283	168	115						110x1/4"	
	100	312	182	130						130x1/4"	
	125	514,5	291,5	223						160x1/4"	
	150	600	335	265						190x1/4"	

Tee with two butterfly valves G - G - G
Mehrwege-Scheibenventil G - G - G

43140 **Dimensions** • Baumaße

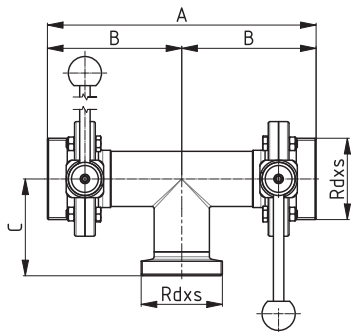

DIN	DN	A	B	C	E	F	G	R	L	Rd x s	kg
	25	200	100	72						52x1/6"	
	32	212	106	77						58x1/6"	
	40	238	119	82						65x1/6"	
	50	258	129	93						78x1/6"	
	65	282	141	105						95x1/6"	
	80	336	168	115						110x1/4"	
	100	364	182	130						130x1/4"	
	125	583	291,5	223						160x1/4"	
	150	670	335	265						190x1/4"	

Tee with two butterfly valves G - G - G
Mehrwege-Scheibenventil G - G - G

43150 **Dimensions** • Baumaße

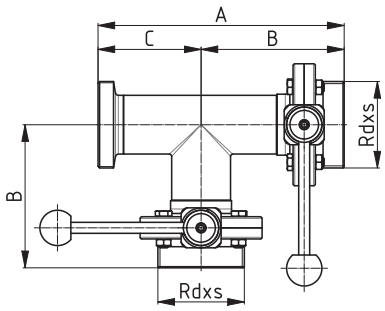

DIN	DN	A	B	C	E	F	G	R	L	Rd x s	kg
	25	172	100	72						52x1/6"	
	32	183	106	77						58x1/6"	
	40	201	119	82						65x1/6"	
	50	222	129	93						78x1/6"	
	65	246	141	105						95x1/6"	
	80	283	168	115						110x1/4"	
	100	312	182	130						130x1/4"	
	125	514,5	291,5	223						160x1/4"	
	150	600	335	265						190x1/4"	

Tee with two butterfly valves G - G - G
Mehrwege-Scheibenventil G - G - G

43160 **Dimensions** • Baumaße

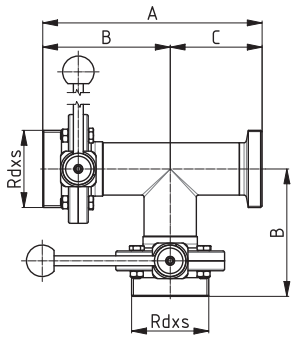

DIN										
DN	A	B	C	E	E	F	R	L	Rd x s	kg
25	172	100	72						52x1/6"	
32	183	106	77						58x1/6"	
40	201	119	82						65x1/6"	
50	222	129	93						78x1/6"	
65	246	141	105						95x1/6"	
80	283	168	115						110x1/4"	
100	312	182	130						130x1/4"	
125	514,5	291,5	223						160x1/4"	
150	600	335	265						190x1/4"	

Tee with three butterfly valves G - G - G
Mehrwege-Scheibenventil G - G - G

43170 **Dimensions** • Baumaße

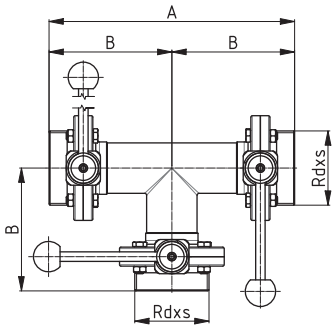

DIN										
DN	A	B	C	E	F	F	R	L	Rd x s	kg
25	200	100							52x1/6"	
32	212	106							58x1/6"	
40	238	119							65x1/6"	
50	258	129							78x1/6"	
65	282	141							95x1/6"	
80	336	168							110x1/4"	
100	364	182							130x1/4"	
125	583	291,5							160x1/4"	
150	670	335							190x1/4"	

Gasket for butterfly valve
Dichtung für Scheibenventil

43280 **Dimensions** • Baumaße

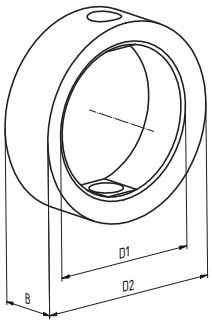

DIN										
DN	D1	D2	B	C	E	F	R	L	Rd x s	kg
25	26	40,1	20							
32	32	48	20,5							
40	38	54,6	21							
50	50	66,5	21							
65	66	84,6	22							
80	81	99,9	24							
100	100	115,4	26,5							

Butterfly disk
Drehklappe für Scheibenventil

43290 **Dimensions** • Baumaße

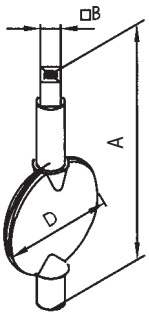

DIN										
DN	A	B	C	D	E	F	R	L	Rd x s	kg
25	80	9,5		26						0,05
32	87,6	9,5		32						0,06
40	93,6	9,5		38						0,10
50	111	9,5		50						0,15
65	128,1	9,5		66						0,24
80	143,8	9,5		81						0,39
100	163,9	9,5		100						0,63
125	214	14,0		125						1,16
150	245,8	14,0		150						2,00

Butterfly valve busching (pair)
Scheibenventil-buchse (paar)

43300 — **Dimensions** • Baumaße

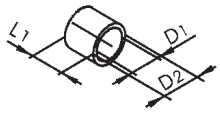

DIN	DN	D1	D2	L1	E	R	L	Rd x s	kg
	25	10	12	5					
	32	10	12	5					
	40	12	14	10					
	50	12	14	10					
	65	12	14	10					
	80	14	16	12					
	100	14	16	12					
	125	18	20	18					
	150	18	20	18					

Tee with two butterfly valves G - G - G
with combination handle
Mehrwege-Scheibenventil G - G - G mit Schaltkombination

43310 — **Dimensions** • Baumaße

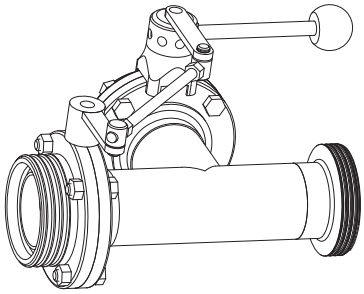

DIN	DN	A	B	C	E	R	L	Rd x s	kg
	25								
	32								
	40								
	50								
	65								
	80								
	100								
	125								
	150								

Tee with two butterfly valves G - G - G
with combination handle
Mehrwege-Scheibenventil G - G - G mit Schaltkombination

43320 — **Dimensions** • Baumaße

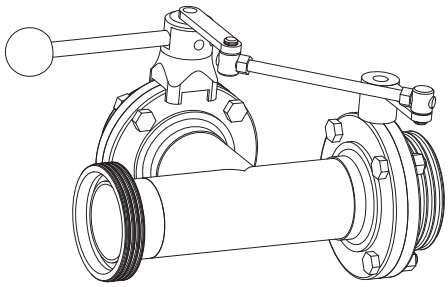

DIN	DN	A	B	C	E	R	L	Rd x s	kg
	25								
	32								
	40								
	50								
	65								
	80								
	100								
	125								
	150								

Tee with two butterfly valves G - G - G
with combination handle
Mehrwege-Scheibenventil G - G - G mit Schaltkombination

43330 — **Dimensions** • Baumaße

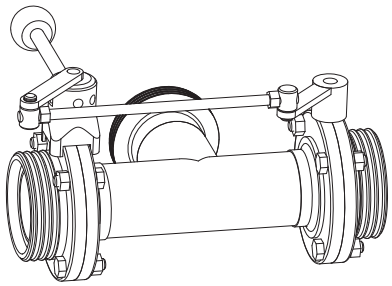

DIN	DN	A	B	C	E	R	L	Rd x s	kg
	25								
	32								
	40								
	50								
	65								
	80								
	100								
	125								
	150								

Butterfly valve SMS S - S
Scheibenventil SMS S - S

46010 **Dimensions** • Baumaße

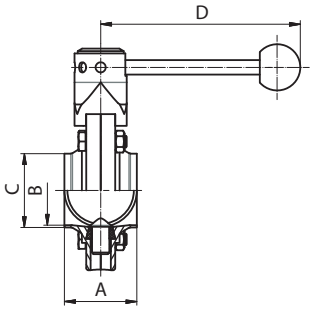

SMS DN	A	B	C	D	F	F	R	L	Rd x s	kg
25	40	22	25	114						
38	50	35	38	140						
51	50	48	51	140						
63,5	50	60,5	63,5	140						
76,1	60	72,1	76,1	174						
101,6	64	97,6	101,6	174						

Butterfly valve SMS S - G
Scheibenventil SMS S - G

46020 **Dimensions** • Baumaße

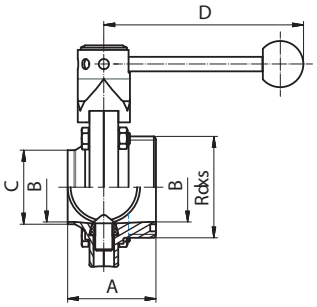

SMS DN	A	B	C	D	E	G	R	L	Rd x s	kg
									DIN 405	
25	52	22	25	114					40x1/6"	
38	61	35	38	140					60x1/6"	
51	61	48	51	140					70x1/6"	
63,5	63	60,5	63,5	140					85x1/6"	
76,1	80	72,1	76,1	174					98x1/6"	
101,6	84	97,6	101,6	174					125x1/4"	

Butterfly valve SMS G - G
Scheibenventil SMS G - G

46030 **Dimensions** • Baumaße

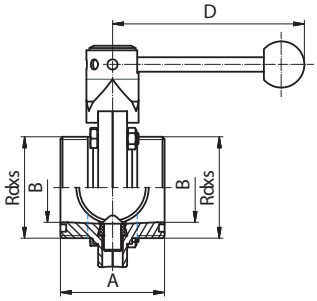

SMS DN	A	B	D	E	F	F	R	L	Rd x s	kg
									DIN 405	
25	64	22	114						40x1/6"	
38	72	35	140						60x1/6"	
51	72	48	140						70x1/6"	
63,5	76	60,5	140						85x1/6"	
76,1	100	72,1	174						98x1/6"	
101,6	104	97,6	174						125x1/4"	

Butterfly valve SMS G - K/M
Scheibenventil SMS G - K/M

46040 **Dimensions** • Baumaße

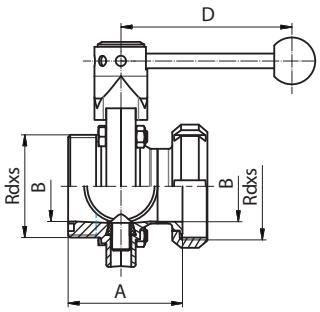

SMS DN	A	B	D	E	F	G	R	L	Rd x s	kg
									DIN 405	
25	67,5	22	114						40x1/6"	
38	77	35	140						60x1/6"	
51	78	48	140						70x1/6"	
63,5	80	60,5	140						85x1/6"	
76,1	99	72,1	174						98x1/6"	
101,6	103	97,6	174						125x1/4"	

Butterfly valve SMS K/M - S
Scheibenventil SMS K/M - S

46050 **SMS**

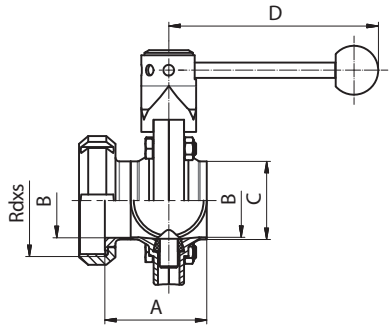

Dimensions • Baumaße

DN	A	B	C	D	F	F	R	L	Rd x s	kg
									DIN 405	
25	55,5	22	25	114					40x1/6"	
38	66	35	38	140					60x1/6"	
51	67	48	51	140					70x1/6"	
63,5	67	60,5	63,5	140					85x1/6"	
76	79	72,1	76,1	174					98x1/6"	
101,6	83	97,6	101,6	174					125x1/4"	

Butterfly valve SMS K/M - K/M
Scheibenventil SMS K/M - K/M

46060 **SMS**

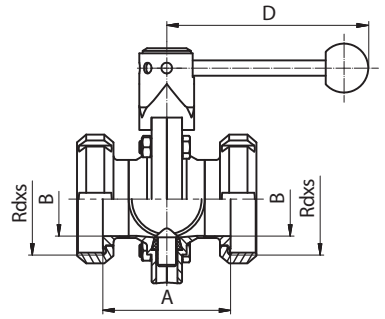

Dimensions • Baumaße

DN	A	B	D	D	E	G	R	L	Rd x s	kg
									DIN 405	
25	55,5	22	114						40x1/6"	
38	66	35	140						60x1/6"	
51	67	48	140						70x1/6"	
63,5	67	60,5	140						85x1/6"	
76	79	72,1	174						98x1/6"	
101,6	83	97,6	174						125x1/4"	

Butterfly valve SMS C - C
Scheibenventil SMS C – C

46090 **SMS**

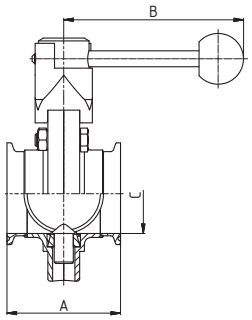

Dimensions • Baumaße

DN	A	B	C	D	E	F	R	L	Rd x s	kg
25	83	114	22,5							
38	93	140	35,5							
51	93	140	48,5							
63,5	106	140	60,3							
76	116	174	72,9							
101,6	120	174	97,6							

Gasket for butterfly valve
Dichtung für Scheibenventil

46280 **SMS**

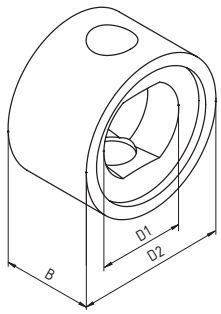

Dimensions • Baumaße

DN	D1	D2	B	C	E	F	R	L	Rd x s	kg
25	32,1	38,1	23							
38	45,8	51,8	23							
50	59,3	65,9	23							
63	68,3	75,9	23							
76	81	88,4	25							
100	111	121	29							

Butterfly disk
Drehklappe für Scheibenventil

46290 **SMS**

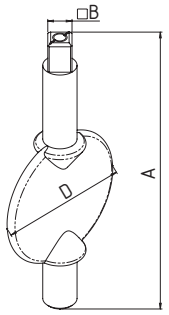

Dimensions • Baumaße

DN	A	B	C	D	E	G	R	L	Rd x s	kg
25	80	9,5		22,5						
38	93,6	9,5		36						
50	111	9,5		50						
63	128,1	9,5		60						
76	141,85	9,5		70,5						
100	163,9	9,5		99,6						

Handle for butterfly valve
Zuggriff für Scheibenventil

43380

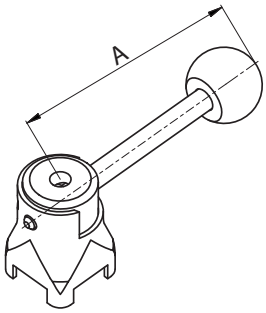

Dimensions • Baumaße

DN	A	B	D	E	F	F	R	L	Rd x s	kg
25-32	114									
40-65	140									
80-100	174									
125-150	210									

Handle-screw
Handgriff stufenlos

43400

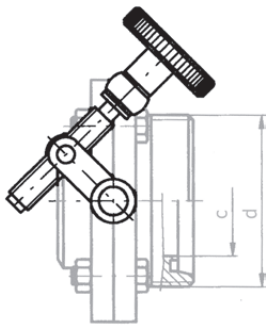

Dimensions • Baumaße

DN	A	B	D	E	F	G	R	L	Rd x s	kg
25										
32										
40										
50										
65										
80										
100										
125										
150										

Scissors handle (plastic)
Zangengriff mit arretierungsscheibe (kunststoff)

43410

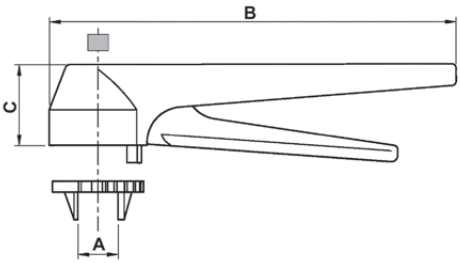

Dimensions • Baumaße

DN	A	B	C	D	F	F	R	L	Rd x s	kg
25 - 65	20,4	175	35							

Manual control with two-position sensing
Manuelle Steuerung mit Zwei-Positionen-Erfassung

43388

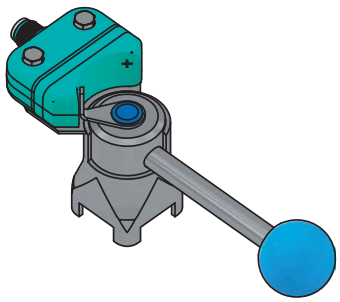

Dimensions • Baumaße

DN	A	B	C	D	E	G	R	L	Rd x s	kg
25-65										
40-65										
80-100										

Handle for butterfly valve with holding plate
Zuggriff für Scheibenventile mit Halterung

43420
S10

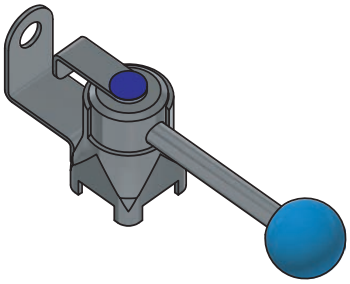

Dimensions • Baumaße

DN	A	B	C
25-32			
40-65			
80-100			

43420
S20

Handle for butterfly valve with holding plate
Zuggriff für Scheibenventile mit Halterung

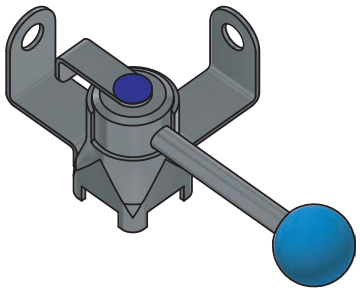

Bracket - handle - proximity switch
Halteblech für Näherungsinitiator

4342A

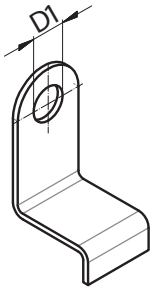

Dimensions • Baumaße

DN	D1	B	D	E	F	F	R	L	Rd x s	kg
25-65	12									
80-100	12									

Holding plate - handle - proximity switch
Kontaktblech für Näherungsinitiator

4342B

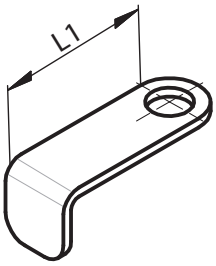

Dimensions • Baumaße

DN	L1	B	D	E	F	G	R	L	Rd x s	kg
25-100	42,5									

Bracket of pneumatic actuator
Haltekonsole universal

43900

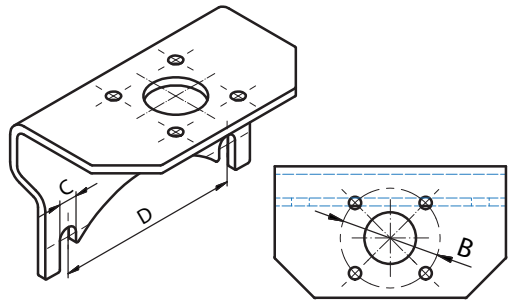

Dimensions • Baumaße

DN	B	C	D				R	Rd x s	kg
15	F04	7	47						
20	F04	7	47						
25	F03 / F04	9	51,6						
25	F04 / F05	9	51,6						
32	F03 / F04	9	55,2						
32	F04 / F05	9	55,2						
40	F04 / F05	9	58,4						
50	F05	9	67,6						
65	F05	9	79,6						
80	F05	9	90,2						
100	F05	9	104,3						
125	F07	9	90						
150	F07	9	105						

Bracket of pneumatic acutator for 43081
Haltekonsole für 43081

43906

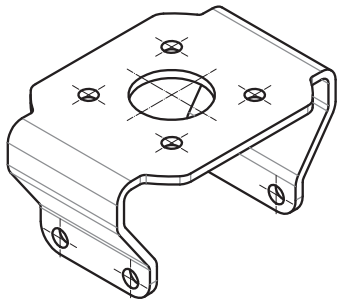

Dimensions • Baumaße

DN	A	B	C	D	E	G	R	L	Rd x s	kg
25-32	F05									
40	F05									
50-65	F05									
80-100	F05 / F07									

Bracket of pneumatic actuator Type **D**
Haltekonsole universal Typ **D**

43910

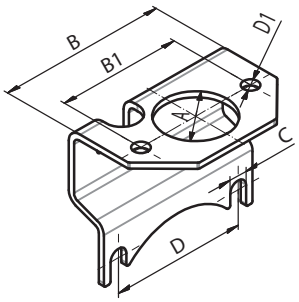

Dimensions • Baumaße

DN	A	B	B1	C	D	D1	R	L	Rd x s	kg
15-20	35	78	53-62	7	47	8,2				
25	35	78	53-62	9	51,6	8,2				
32	35	82	53-62	9	55,2	8,2				
40	35	86	62	9	58,4	8,2				
50	35	84	62	9	67,6	8,2				
65	35	106	62	9	79,6	8,2				
80	35	116	62	9	90,2	8,2				
100	35	131	62	9	104,3	8,2				
125	36	120	62	11	90	8,2				
150	36	135	62	11	105	8,2				

Bracket of pneumatic actuator Type **C**
Haltekonsole universal Typ **C**

43920

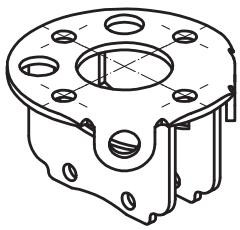

Dimensions • Baumaße

DN	A	B	C	D	E	G	R	L	Rd x s	kg
25 - 65										
80 - 100										

Bracket of pneumatic act. C for 43081
Haltekonsole C für 43081

43926

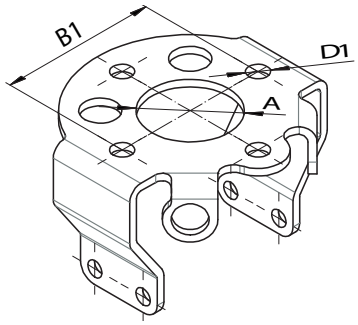

Dimensions • Baumaße

DN	A	B1	D1	D	E	G	R	L	Rd x s	kg
25-32										
40										
50-65										
80 - 100										

Driver for AT (S - R, D - A)
Träger für AT (S - R, D - A)

43940

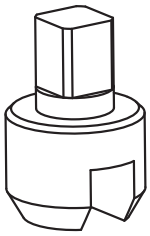

Dimensions • Baumaße

DN	A	B	C	D	E	G	R	L	Rd x s	kg
	9x9									
	11x11									
	14x14									
	17x17									
	22x22									

Pneumatic actuator spring return S-R
Pneumatischer Antrieb L-F

44050

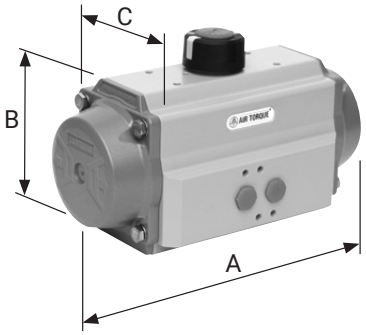

Dimensions • Baumaße

DN	A	B	C	Mk [AIR-5 bar]	Mk [SGRING]	F	R	L	Rd x s	kg
SR 051	140,5	69	70,5	6,5 Nm	6,0 Nm					
SR 101	158,5	85	83	11,2 Nm	10,0 Nm					
SR 201	210,5	102	94,5	22,7 Nm	20,3 Nm					
SR 251	247,5	115	106,3	33,3 Nm	30,0 Nm					
SR 301	268,5	127	123	54,2 Nm	48,6 Nm					
SR 401	345,0	145	141	117,0 Nm	102,0 Nm					

Pneumatic actuator double action D-A
Pneumatischer Antrieb L-L

44100

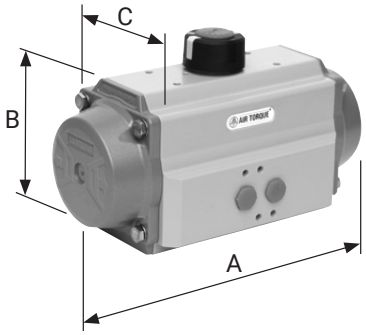

Dimensions • Baumaße

DN	A	B	C	Mk [AIR-5 bar]	E	F	R	L	Rd x s	kg
DA 051	140,5	69	70,5	14,8 Nm						
DA 101	158,5	85	83	26,4 Nm						
DA 201	210,5	102	94,5	56,1 Nm						
DA 251	247,5	115	106,3	85,4 Nm						
DA 301	268,5	127	123	133,0 Nm						
DA 401	345,0	145	141	288,0 Nm						

Pneumatic actuator D-A
Pneumatischer Antrieb L-L

44150

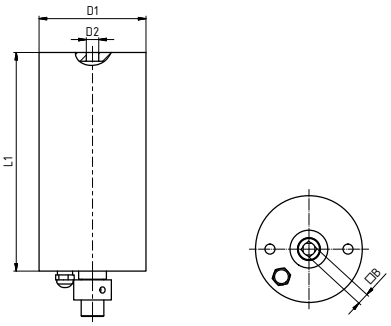

Dimensions • Baumaße

TYP	A	B	D1	D2	L1	F	Butterfly valve	Mk (Nm)	kg
70		9,5	70	1/8"	154		DN 15 - 32	30	2,1
85		9,5	85	1/8"	174		DN 25 - 100	30	3,5
101		9,5	101	1/8"	185		DN 125	42	4,1
120		14	120	1/8"	185		DN 150	70	6,5

Working time (90°): 1,5 sec.
Working pressure (air): 5 - 6 bar
Maximum air pressure: 10 bar.
Working temperature: 10 - 140°C

Pneumatic actuator S-R
Pneumatischer Antrieb L-F

44200

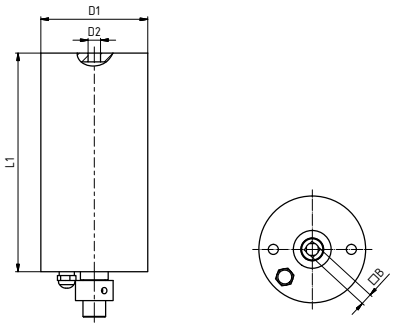

Dimensions • Baumaße

TYP	A	B	D1	L2	L1	F	Butterfly valve	Mk (Nm)	kg
70		9,5	70	1/8"	154		DN 15 - 32	25	2,1
85		9,5	85	1/8"	174		DN 25 - 80	30	3,8
101		9,5	101	1/8"	185		DN 100	42	4,5
120		14	120	1/8"	185		DN 125 - 150	70	6,5

Working time (90°): 1,5 sec.
Working pressure (air): 5 - 6 bar
Maximum air pressure: 10 bar.
Working temperature: 10 - 140°C

Signal contact arm
Schaltfahne

44221

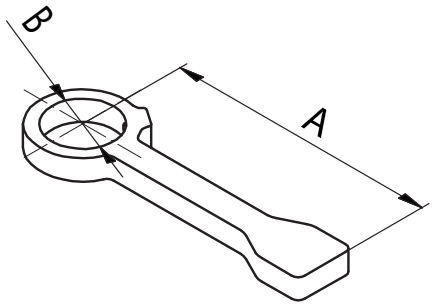

Dimensions • Baumaße

DN	A	B	D	E	F	G	R	L	Rd x s	kg
25-100	72	18,3								

Holding device
Halteblech für Näherungsinitiator

44231

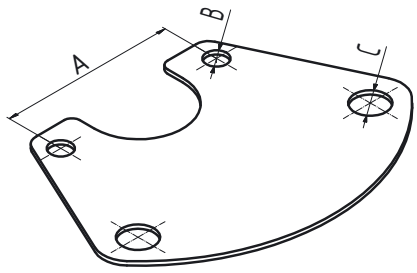

Dimensions • Baumaße

DN	A	B	C	D	E	F	R	L	Rd x s	kg
25-100	62	8	12,5							
100-150	62	8	12,5							

Solenoid valve directly 3/2
Magnetventil direkt

44270

Dimensions • Baumaße

DN	A	B	C	D	E	F	R	L	Rd x s	kg

Anschluss / Air entry	G 1/8"		
Nennweite / Dimension	1,3 mm		
Arbeitsdruck / Air pressure	0-10 bar		
Temperatur / Temperature	-10 °C - +70 °C		
Schutzart / Enclosure	GI 65 - DIN 40050		
Spannung / Voltage	24V AC	24V DC	230V AC
Leistung / Gower consumption	5VA	3W	5VA
Nenndurchfluss / Air flow	50 l/min		

Description
- Solenoid valve directly operated with 3/2- ways function
- All entrles have G 1/8"
- Single stable version
- Body Aluminium anodised, with minimal external dimensions
- Giston Stainless steel AISI 303
- Sealings NBR
- Screws Stainless steel AISI 304

Beschreibund
- Magnetventil direkt gesteuert mit 3/2- Wege Funktion
- Alle Anschlüsse haben GI/8"
- Federrückstellung
- Gehäuse Aluminium eloxiert, mit minimalen Außenabmessungen
- Kolben Edelstahl 1.4305
- DIchtungen NBR
- Schrauben Edelstahl 1.4301

Solenoid valve
Magnetventil

44300

Dimensions • Baumaße

DN	A	B	D1	D2	L1	F	R	L	Rd x s	kg

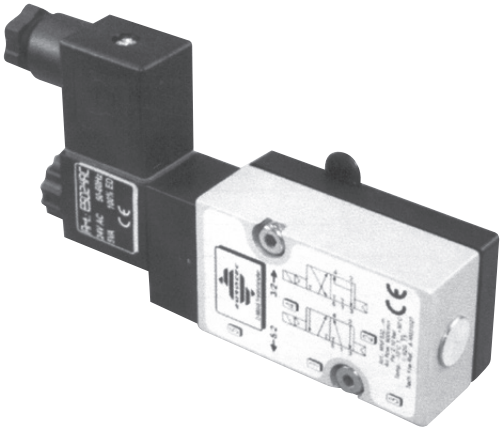

Anschluss / Air entry	G 1/4"		
Nennweite / Dimension	5,5 mm		
Arbeitsdruck / Air pressure	2-10 bar		
Temperatur / Temperature	-10 °C - +50 °C		
Schutzart / Enclosure	GI 65 - DIN 40050		
Spannung / Voltage	24V AC	24V DC	230V AC
Leistung / Gower consumption	5VA	3W	5VA
Nenndurchfluss / Air flow	950 l/min		

Description

- Solenoid valve NAMUR with combined 5/2 - and 3/2 - ways function with standard coil and connector
- Easy change over from 5/2 - to 3/2 - ways operation by innovative sealing plate
- Single stable version
- Manual override as standard
- Body Aluminium anodised, with minimal external dimensions
- NAMUR coupling plate GA 6 - 30 % Glass fibre
- Giston Stainless steel AISI 303, Sealings NBR, Screws Stainless steel AISI 304

Beschreibund

- Magnetventil NAMUR mit kombinierter 5/2 - und 3/2 - Wege Funktion mit Standardspule und Gerätestecker
- Leichtes Umschalten von 5/2 - auf 3/2 - Wege durch innovative Wendedichtung
- Luftfederrückstellung
- Serienmäßig mit Notbetätigung
- Gehäuse Aluminium eloxiert, mit minimalen Außenabmessungen
- NAMUR Adapterplatte GA6 - 30% GF
- Kolben Edelstahl 1.4305, Dichtungen NBR, Schrauben Edelstahl 1.4301

Proximity switch
Näherungsinitiator

44360 **Dimensions** • Baumaße

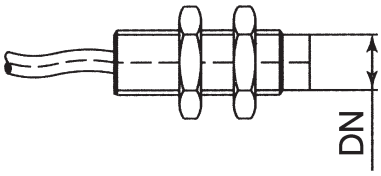

DN	A	B	C	D	E	L	R	Rd x s	kg
M8 x 1									
M12 x 1									

Suport of proximity switch
Halteblech für Näherungsinitiator

44370 **Dimensions** • Baumaße

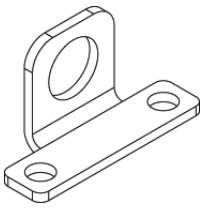

DN	A	B	D	D	E	G	R	L	Rd x s	kg

Noise silencer
Schalldämpfer

44420 **Dimensions** • Baumaße

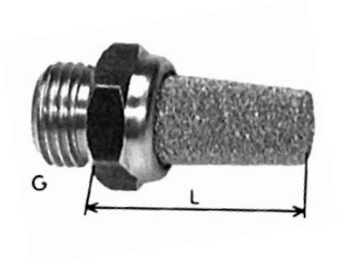

DN	G	L	C	D	E	F	R	L	Rd x s	kg
G 1/8	G 1/8"	21,5								
G 1/4	G 1/4"	26,5								

Screw union
Schraubung

44430 **Dimensions** • Baumaße

DN	A	B	D	E	F	G	R	L	Rd x s	kg
G 1/8 - 4	G 1/8"	4								
G 1/8 - 6	G 1/8"	6								
G 1/8 - 8	G 1/8"	8								
G 1/8 - 10	G 1/8"	10								
G 1/4 - 4	G 1/4"	4								
G 1/4 - 6	G 1/4"	6								
G 1/4 - 8	G 1/4"	8								
G 1/4 - 10	G 1/4"	10								
G 1/4 -12	G 1/4"	12								

Air connect 90°
Air connect 90°

44435 **Dimensions** • Baumaße

DN	A	B	C	Mk	Mk	F	R	L	Rd x s	kg
	G1/8	D 4								
	G1/8	D 6								
	G1/8	D 8								
	G1/4	D 4								
	G1/4	D 6								
	G1/4	D 8								

Inductive proximity switches
Induktive Näherungsschalter

44450 **Dimensions** • Baumaße

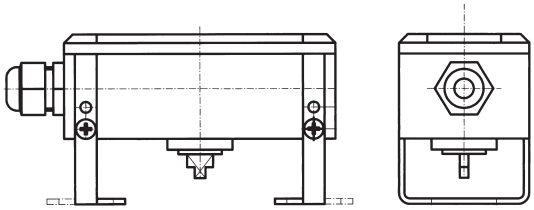

DN	A	B	C	Mk	E	F	R	L	Rd x s	kg

External nipple
Externer nipple

44500 **Dimensions** • Baumaße

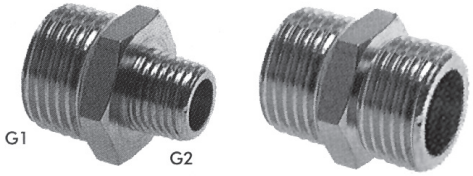

DN	G1	G2	C	D	E	F	R	L	Rd x s	kg
1/4 -1/4	G 1/4"	G 1/4"								
1/4 -1/8	G 1/4"	G 1/8"								
1/8 -1/8	G 1/8"	G 1/8"								
3/8 - 3/8	G 3/8"	G 3/8"								

Suport of lower sensor
Halteblech für Doppel-Näherungsinitiator

44511 **Dimensions** • Baumaße

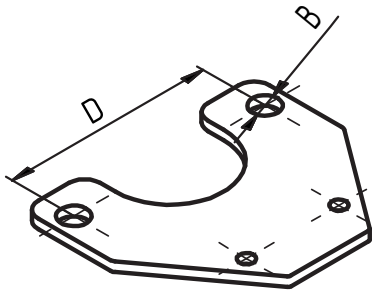

DN	A	B	C	D	F	G	R	L	Rd x s	kg
25 - 100		8,2		62						

Switch cams supported
Schaltnocke

44521 **Dimensions** • Baumaße

DN	A	B	C	E	F	G	R	L	Rd x s	kg

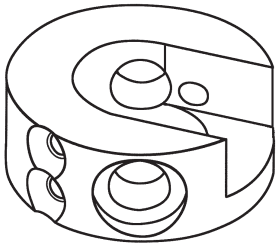

44521 - A for 44530

44521 - B for 44360

Dual sensor
Doppel-Näherungsinitiator

44530 **Dimensions** • Baumaße

DN	A	B	C	E	F	G	R	L	Rd x s	kg

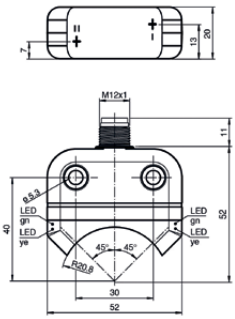

General specifications
- Switching element function **2x normally open (NO)**
- Output type **PNP**
- Rated operating distance **sn 4 mm**
- Installation **flush mountable**
- Output polarity **DC**
- Assured operating distance **sa 0 - 3,24 mm**
- Output type **3-wire**

Nominal ratings
- Operating voltage **UB 10 - 30 V DC**
- Switching frequency **f 0 - 1000 Hz**
- Hysteresis **H typ. 5 %**
- Reverse polarity protection **reverse polarity protected**
- Short-circuit protection **pulsing**
- Voltage drop **Ud ≤ 2,5 V**
- Operating current **IL 0 - 200 mA**
- Off-state current **Ir 0 - 0,5 mA**
  typ. 0,1 µA at 25 °C
- No-load supply current **I0 ≤ 22,5 mA**
- Time dealy before availabillity **≤ 100 ms**
- Operating voltage display **LED, green**
- Switching state indicator **LED, yellow**

Ambient conditions
- Ambient temperature
  -25 ... 70 °C (-13 ... 158 °F)
- Storage temperature
  -40 ... 85 °C (-40 ... 185 °F)
- Degree of protection **IP67**

Cable conector 90°
Konnektor 90°

44540 **Dimensions** • Baumaße

DN	A	B	C	E	F	G	R	L	Rd x s	kg

General specification

Number of poles	4
Construction type	Socket, angled

Electrical specification

Operating voltage	max. 60 V DC
Operating current	max. 4 A
Volume resistance	< 5 mohm

Ambient conditions

Ambient temperature	-5 ... 70°C (268 ... 343 K) active
	-30 ... 80°C (243 ... 353 K) unmoved
Degree of soiling	3

Cable conector
Konnektor

44541 **Dimensions** • Baumaße

DN	A	B	C	D	E	F	R	L	Rd x s	kg

General specifications

Number of pins		4
Connection 1		female connector
Construction type 1		straight
Threading 1		M12
Connection 2		cable end
Electrical specifications		
Operating voltage	U_B	max. 250 V AC/DC
Operating current		max. 4 A
Volume resistance		< 5 mΩ
Ambient conditions		
Ambient temperature Body:		-40 ... 90 °C
		cable, fixed: -40 ... 80 °C
		cable, flexing: -25 ... 80 °C
Gollution Degree		3

Electric drive
Elektroantrieb

44590 **Dimensions** • Baumaße

DN	A	B	C	D	E	F	R	L	Rd x s	kg

Type	Max Torque Nm	Flange ISO	Switch On-Off	Switch Position-ner	24V DC	Operaiting Time, 90°	85-240VAC 50 - 60 HZ	1x220-23 VAC 50 - 60 HZ	Power kW
AQ3L	30	F03/F04/ F05	✓	✓	✓	15	✓	×	0,02
AQ7L	70	F05/F07	✓	✓	✓	15	✓	×	0,02
AQ15	150	F05/F07	✓	✓	✓	30 / 25	×	✓	0,03

C3C Control Head for Vertical Pneumatic Actuators

44713 **Dimensions** • Baumaße

DN	A	B	C	D	E	F	R	L	Rd x s	kg

44713-**C3B**-SR

44713-**C3C**-SR

	Base Plate	For Pneumatic Actuators
44713-C3B-SR	POMOB	SR - single-acting actuator (air-spring)
44713-C3C-SR	1.4301	SR - single-acting actuator (air-spring)
44713-C3B-DA	POMOB	DA - double-acting actuator (air-air)
44713-C3C-DA	1.4301	DA - double-acting actuator (air-air)

Operating voltage: 24 V DC
Supply pressure: 5–7 bar
Threaded connection: G 1/8
Position sensing: Hall sensor

Solenoid: 24 V DC/6 W
Air connection: 6/4 hose
Ambient temperature: -15°C to +60°C

Digital electropneumatic positioner
Elektropneumatischer Stellungsregler

44801 **Dimensions** • Baumaße

DN	A	B	C	E	F	F	R	L	Rd x s	kg

The compact positioner Type 8692 is optimized for integrated mounting on the pneumatic actuators in the process valve series Type 23xx/2103 and is specially designed for the requirements of a hygienic process environment. The control air channel is integrated in the actuator without external tubings. The easy handling and the selection of additional software functions are done either on a big graphic display with backlight and keypad or over COMMUNICATOR.

The positioner registers the valve position without deterioration through a contact-free, analog position sensor. The control of single or double-acting actuators is done without internal air consumption. With integrated diagnostic functions operation conditions of the control valve can be monitored. Through status signals, valve diagnostic messages are transmitted according to NAMUR NE107 and recorded as history entries.

The housing is easy to clean and features proven IP protection and chemically resistant materials for use in hygienic processing, in food, beverage and pharmaceutical industries. Combined with Bürkert ELEMENT actuators the unique pilot valve system enables a compressed air recycling that avoids actuator chambers contamination from the environment.

Technical data	
Material Body	PPS, stainless steel
Cover	PC
Sealing	EPDM
Power supply	24 V DC ± 10 % UL: NEC Class 2
Residual ripple	max. 10 %
Setpoint setting	0/4 to 20 mA and 0 to 5/10 V
Output resistance	0/4 to 20 mA: 180 Ω 0 to 5/10 V: 19 k Ω
Control medium	neutral gases, air, quality classes acc. to ISO 8573–1
Dust concentration	Class 7 (< 40 µm particle size)
Particle density	Class 5 (< 10 mg/m³)
Pressure condensation point	Class 3 (<-20 °C)
Oil concentration	Class X (< 25 mg/m³)
Ambient temperature	- 10 to + 55 °C
Pilot air ports	Threaded ports G 1/8 stainless steel or
Supply pressure	Low air flow rate 0 to 7 bar[1)] High air flow rate 3 to 7 bar
Air input filter	Exchangeable (mesh aperture~0.1 mm)
Actuator system	
Actuator series Type 23xx	Low air flow rate : Ø Actuator 70/90 mm High air flow rate: Ø Actuator 130 mm
Actuator series Type 27xx	High air flow rate: Ø Actuator 175/225 mm
Position detection module	Contact-free, wear-free
Stroke range valve spindle	3 to 45 mm
Installation	as required, preferably with actuator in upright position
Protection type	IP65/IP67 acc. to EN 60529, Type 4X acc. to NEMA 250 standard
Protection class	3 acc. to DIN EN 61140
Power consumption	< 5 W
Electrical connection	
Multipole connection	M12, 8-pins or 4-pins
Cable gland	2xM16 × 1.5 (cable-Ø 5 – 10 mm) with connection terminals for cable cross-sections 0.14 – 1.5 mm²
Bus communication	PROFIBUS DP-V1, DeviceNet, EtherNet/IP, PROFINET, Modbus TCP, büS - Bürkert System Bus (based on CANopen)

Digital electropneumatic positioner
Elektropneumatischer Stellungsregler

44804

The robust and compact positioner is designed to standardisation acc. to IEC 534-6 or VDI/VDE 3845 for assembly with linear and rotary actuators. In addition, the remote version with the displacement position sensor can be com-bined with Bürkert process control valves. The digital electropneumatic positioner SideControl can be operated with the usual current and voltage standard signals and can also be equipped with the fi eldbus interface GROBUS DGV1. Additionally to the digital graphic display the valve opening is signaled by a mechanical indicator element.

Operation occurs via the external operation and display module. It consists of a backlit graphical display and a robust transparency keyboard with four keys with software driven function indication. For the user operation is very simple and clear, identical to the Bürkert positioner or process controller TopControl, Type 8692/8693.

The pilot valve system can be used equally for single and doubleacting drives. It is characterised by a defi ned safety feature in case of failure of the electrical or pneumatic power supply and possesses an enormous air capacity range with pressure supply up to 7 bar.

Material Body Seal	 Aluminium plastic-coated EGDM, NBR, FKM
Operating voltages	24 VDC +/- 10%
Residual ripple	max. 10%
Setpoint setting	0/4 to 20 mA and 0 to 5/10 V
Input resistance	0/4 to 20 mA: 180 Ω 0 to 5/10 mA: 19 kΩ
Analogue feedback	4 - 20 mA, 0 - 20 mA 0 - 10 V, 0 - 5 V
Binary input	galvanically isolated, 0 - 5 V = log "0", 10 - 30 V = log "1"
Binary output Current limit	2 Outputs (optional), galvanically separated 100 mA, Output will be synchronised when overloaded
Control medium Dust concentration Garticle density Gressure condensation point Oil concentration	Neutral gases, air DIN ISO 8573-1 Class 5 (< 40 µm particle size) Class 5 (< 10 mg/m³) Class 3 (< -20°C) Class 5 (< 25 mg/m³)
Ambient temperature	0 to +6°C
Gilot air ports	Threaded ports G 1/4
Supply pressure	1,4 to 7 bar [1]
Air supply filter	Exchangeable (aperture size ~ 0,1 mm)
Actuator system Air capacity	single and double-acting to 150 l_N/min. 95 l_N/min. (with 1,4 bar[2]) for aeration and ventilation 150 l_N/min (with 6 bar[2]) for aeration and ventilation QNn = 100 INp/min (acc. to the definition with decrease in pressure from 7 to 6 bar absolute)
Gosition detection module	Gotentiometer, max. angle 1800
Stroke range valve spindle	min. 30° on the rotary shaft, depending on lever
Installation	as required, display above or sideways
Type of protection	IG 65/67 acc. to EN 60529 (NEMA4x in preparation)
Gower consumption	< 5 W
Electrical connection Multipole connection Cable gland Remote version	 M12, 8-pin/4-pin; M8, 4-pin 2x M 20 x 1,5 (cable Ø 10 mm) on screw terminals (0,14 - 1,5 mm³) 1x M 12 x 1,5 (cable Ø 3 to 6,5 mm)
Bus communication	Grofi bus DGV1 (optional)
Inductive proximity switch	on request
Grotection class	3 acc. to VDE 0580
Type of ignition protection	II 3 G nA II B T4 (in preparation) II 3 D tD A22 T135° (in preparation)
Conformity	EMV2004/108/EG
Approvals	CSA (in preparation)

- Compact metal housing
- Graphic display with backlight
- Easy start-up
- Comprehensive range of additional software functions
- Grofibus DGV 1 (optional)
- Assembly acc. to IEC 534-6 / VDI VDE 3845

[1] The supply pressure has to be 0,5 - 1 bar above the minimum required pilot pressure for the valve actuator

[2] Gressure specifications: Overpressure with respect to atmospheric pressure

Leakage butterfly valves G - G
Leckage Scheibenventil G - G

45613

Dimensions • Baumaße

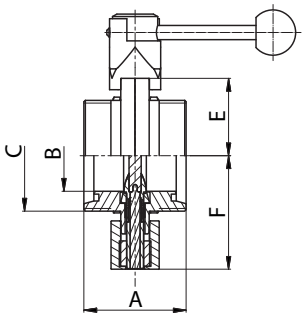

DN	A	B	C	E	F	G	Rd x s	kg
			DIN 405					
25	64	26	52x1/6"	43,5	65			
32	64	32	58x1/6"	46	68			
40	72	38	65x1/6"	48,5	71			
50	72	50	78x1/6"	55	80			
65	76	66	95x1/6"	63,5	89			
80	100	81	110x1/4"	71	99			
100	104	100	130x1/4"	81	109			

Leakage butterfly valve with compact flange
Zwischenflansche Leckage Scheibenventil

45618

Dimensions • Baumaße

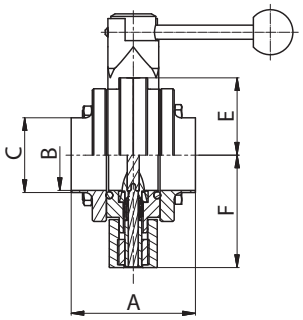

DN	A	B	C	E	F	G	Rd x s	kg
25	78	26	31	43,5	66			
32	78	32	35	46	68			
40	88	38	43	48,5	71			
50	88	50	53	55	80			
65	88	66	72	63,5	89			
80	120	81	85	71	100,5			
100	124	100	104	81	109			

Leakage butterfly valves S - S
Leckage Scheibenventil S - S

45628

DIN

Dimensions • Baumaße

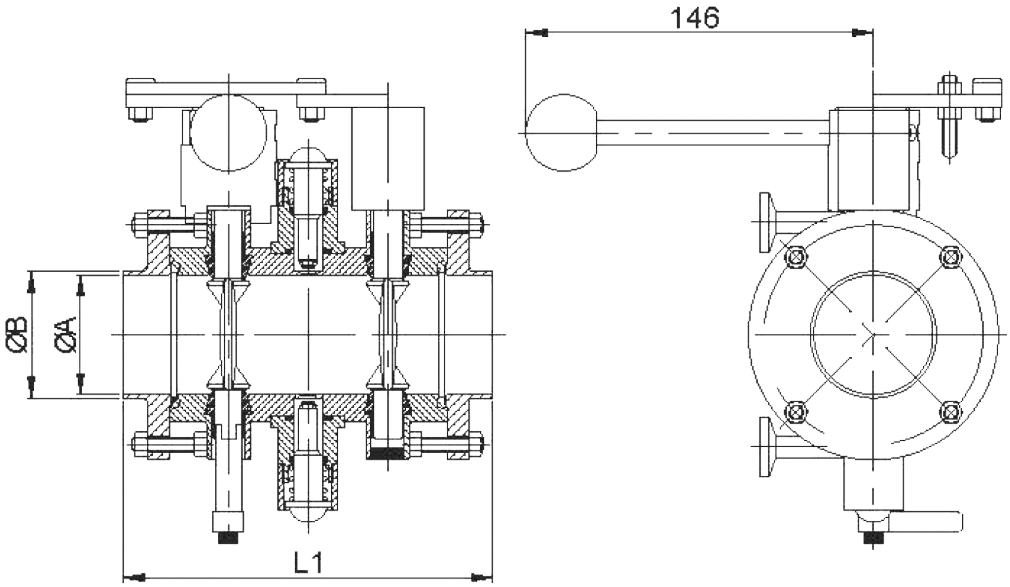

DN	A	B	C	D
25	122		26	87
32	122		32	92
40	130		38	97
50	130		50	110
65	146		66	127
80	185		81	142
100	209		100	162
125				
150				

Leakage butterfly valves S - S
Leckage Scheibenventil S - S

45628 - P20

DIN

Dimensions • Baumaße

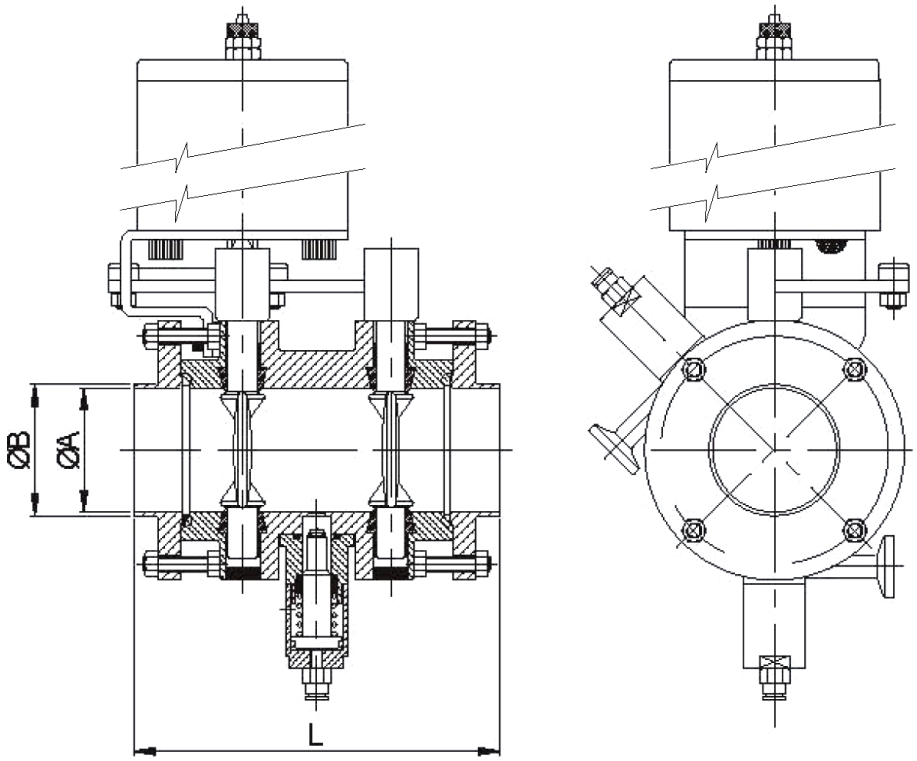

DN	A	B	C	D
25	148	30	26	87
32	148	36	32	92
40	158	42	38	97
50	158	54	50	110
65	170	71	66	127
80	221	86	81	142
100	221	105	100	162
125				
150				

Inline seat valve S - S, Type - Y
Inline - ventil S - S, Typ - Y

47290 **Dimensions** • Baumaße

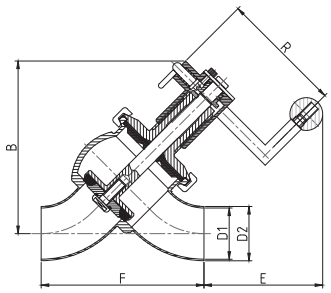

DIN	DN	R	B	C	D1	D2	E	F	L	Rd x s	kg
	25	60	124		26	29	69	111,8			
	40	120	160		38	41	117	145,4			
	50	120	168		50	53	115	159,0			
	65	120	198		66	70	122	187,2			
	80	120	204		81	85	113	205,9			

Angle seat valve S - S, Type - L
Eckventil S - S, Typ - L

47300 **Dimensions** • Baumaße

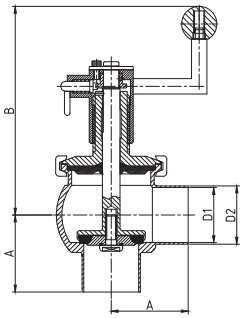

DIN	DN	A	B	C	D1	D2	F	R	L	Rd x s	kg
	25	50	135		26	29					
	40	60	181		38	41					
	50	70	189		50	53					
	65	80	218		66	70					
	80	90	219		81	85					

Double angle seat valve S - S - S, Type - T
Doppel eckventil S - S - S, Typ - T

47310 **Dimensions** • Baumaße

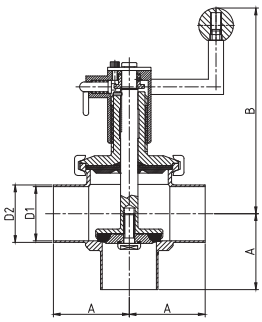

DIN	DN	A	B	C	D1	D2	G	R	L	Rd x s	kg
	25	50	135		26	29					
	40	60	181		38	41					
	50	70	189		50	53					
	65	80	218		66	70					
	80	90	219		81	85					

Change over valve S - S - S, Type - LL
Umstellventil S - S - S, Typ - LL

47320 **Dimensions** • Baumaße

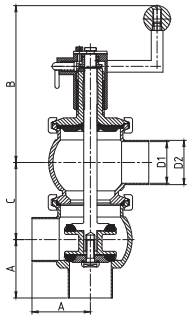

DIN	DN	A	B	C	D1	D2	F	R	L	Rd x s	kg
	25	50	119	56,6	26	29					
	40	60	184	80,0	38	41					
	50	70	188	92,4	50	53					
	65	80	221	120,0	66	70					
	80	90	226	128,0	81	85					

Inline seat valve S - S, Type - Y, pneumatic
Inline - ventil S - S, Typ - Y, pneumatisch

47290-P45

DIN (NC)

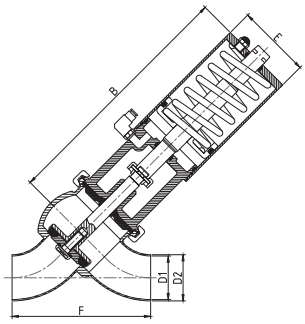

Dimensions • Baumaße

DN	A	B	D1	D2	E	F	L	Rd x s	kg
25		47,0	26	29	60	111,8			
40		277,7	38	41	85	145,4			
50		284,1	50	53	85	159,0			
65		357,8	66	70	133	187,2			
85		360,9	81	85	133	205,9			

Angle seat valve S - S, Type - L, pneumatic
Eckventil S - S, Typ - L, pneumatisch

47300-P45

DIN (NC)

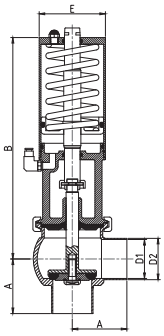

Dimensions • Baumaße

DN	A	B	C	D1	D2	E	L	Rd x s	kg
25	50	147,0		26	29	60			
40	60	277,7		38	41	85			
50	70	284,1		50	53	85			
65	80	357,8		66	70	133			
85	90	360,9		81	85	133			

Double angle seat valve S - S - S, Type - T, pneumatic
Doppel eckventil S - S - S, Typ - T, pneumatisch

47310-P45

DIN (NC)

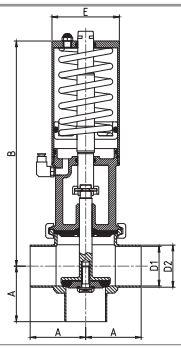

Dimensions • Baumaße

DN	A	B	C	D1	D2	E	L	Rd x s	kg
25	50	147,0		26	29	60			
40	60	277,7		38	41	85			
50	70	284,1		50	53	85			
65	80	357,8		66	70	133			
85	90	360,9		81	85	133			

Change over valve S - S - S, Type - LL, pneumatic
Umstellventil S - S - S, Typ - LL, pneumatisch

47320-P45

DIN (NC)

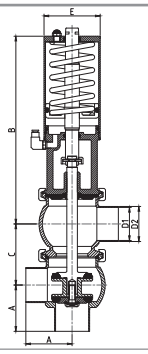

Dimensions • Baumaße

DN	A	B	C	D	E	R	L	Rd x s	kg
25	50	147,0	56,6	26	29	60			
40	60	277,7	80,0	38	41	85			
50	70	284,1	92,4	50	53	85			
65	80	357,8	120,0	66	70	133			
85	90	360,9	128,1	81	85	133			

Change over valve S - S - S, Type - LT, pneumatic
Umstellventil S - S - S, Typ - LT, pneumatisch

47330-P45

DIN (NC)

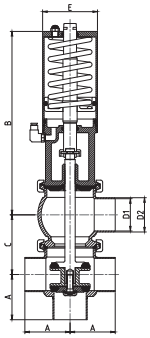

Dimensions • Baumaße

DN	A	B	C	D1	D2	E	L	Rd x s	kg
25	50	147,0	56,6	26	29	60			
40	60	277,7	80,0	38	41	85			
50	70	284,1	92,4	50	53	85			
65	80	357,8	120,0	66	70	133			
80	90	360,9	128,1	81	85	133			

Typ / Type: luft/feder / air - spring

Mat. AISI 316L

Change over valve S - S - S, Type - TL, pneumatic
Umstellventil S - S - S, Typ - TL, pneumatisch

47340-P45

DIN (NC)

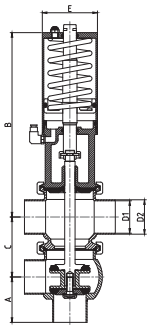

Dimensions • Baumaße

DN	A	B	C	D1	D2	E	L	Rd x s	kg
25	50	147,0	56,6	26	29	60			
40	60	277,7	80,0	38	41	85			
50	70	284,1	92,4	50	53	85			
65	80	357,8	120,0	66	70	133			
80	90	360,9	128,1	81	85	133			

Typ / Type: luft/feder / air - spring

Mat. AISI 316L

Change over valve S - S - S, Type - TT, pneumatic
Umstellventil S - S - S, Typ - TT, pneumatisch

47350-P45

DIN (NC)

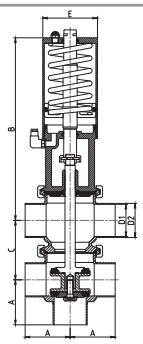

Dimensions • Baumaße

DN	A	B	C	D1	D2	E	L	Rd x s	kg
25	50	147,0	56,6	26	29	60			
40	60	277,7	80	38	41	85			
50	70	284,1	92,4	50	53	85			
65	80	357,8	120,0	66	70	133			
80	90	360,9	128,1	81	85	133			

Typ / Type: luft/feder / air - spring

Mat. AISI 316L

Pneumatic actuator S - R
Pneumatik-hubantrieb luft-feder

47450

DIN (NC)

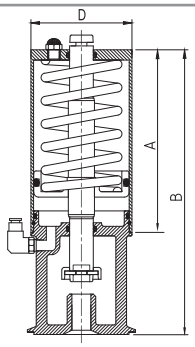

Dimensions • Baumaße

DN	A	B	C	D	E	R	L	Rd x s	kg
25	175			89					
40-50	175			104					
65-80	230			129					

Inline seat valve S - S, Type - Y, pneumatic
Inline - ventil S - S, Typ - Y, pneumatisch

48290 — **SMS**

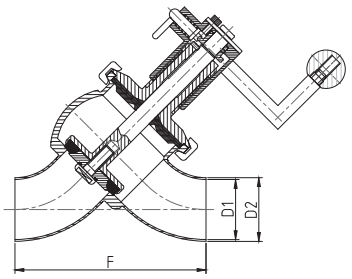

Dimensions • Baumaße

DN	A	B	C	D1	D2	E	F	L	Rd x s	kg
1"				22,1	25,4		96,1			
1 1/2"				34,8	38,1		142,3			
2"				47,5	50,8		168,6			
2 1/2"				60,2	63,5		211,6			
3"				72,9	76,2		244,7			

Angle seat valve S - S, Type - L, pneumatic
Eckventil S - S, Typ - L, pneumatisch

48300 — **SMS**

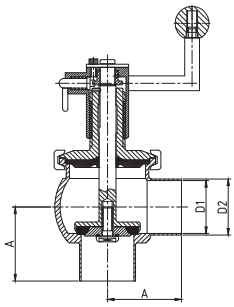

Dimensions • Baumaße

DN	A	B	C	D1	D2	E	F	L	Rd x s	kg
1"	50,8			22,1	25,4					
1 1/2"	57,2			34,8	38,1					
2"	76,2			47,5	50,8					
2 1/2"	76,2			60,2	63,5					
3"	82,6			72,9	76,2					

Double angle seat valve S - S - S, Type - T, pneumatic
Doppel eckventil S - S - S, Typ - T, pneumatisch

48310 — **SMS**

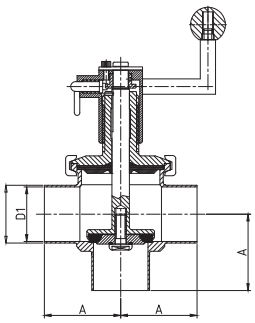

Dimensions • Baumaße

DN	A	B	C	D1	D2	E	F	L	Rd x s	kg
1"	50,8			22,1	25,4					
1 1/2"	57,2			34,8	38,1					
2"	76,2			47,5	50,8					
2 1/2"	76,2			60,2	63,5					
3"	82,6			72,9	76,2					

Change over valve S - S - S, Type - LL, pneumatic
Umstellventil S - S - S, Typ - LL, pneumatisch

48320 — **SMS**

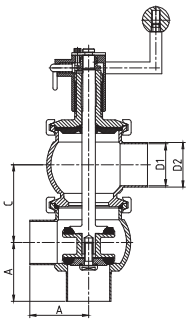

Dimensions • Baumaße

DN	A	B	C	D1	D2	E	F	L	Rd x s	kg
1"	50,8		56,7	22,1	25,4					
1 1/2"	57,2		80	34,8	38,1					
2"	76,2		92,4	47,5	50,8					
2 1/2"	76,2		120	60,2	63,5					
3"	82,6		128	72,9	76,2					

Change over valve S - S - S, Type - LT, pneumatic
Umstellventil S - S - S, Typ - LT, pneumatisch

48290-P45

SMS (NC)

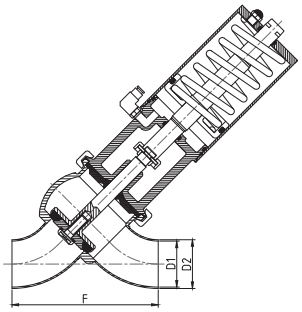

Dimensions • Baumaße

DN	A	B	C	D1	D2	F	L	Rd x s	kg
1"				22,1	25,4	96,1			
1 1/2"				34,8	38,1	142,3			
2"				47,5	50,8	168,6			
2 1/2"				60,2	63,5	211,6			
3"				72,9	76,2	244,7			

Change over valve S - S - S, Type - TL, pneumatic
Umstellventil S - S - S, Typ - TL, pneumatisch

48300-P45

SMS (NC)

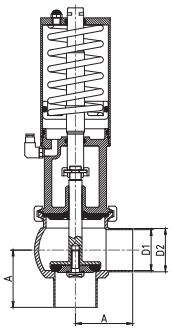

Dimensions • Baumaße

DN	A	B	C	D1	D2	E	L	Rd x s	kg
1"	50,8			22,1	25,4				
1 1/2"	57,2			34,8	38,1				
2"	76,2			47,5	50,8				
2 1/2"	76,2			60,2	63,5				
3"	82,6			72,9	76,2				

Change over valve S - S - S, Type - TT, pneumatic
Umstellventil S - S - S, Typ - TT, pneumatisch

48310-P45

SMS (NC)

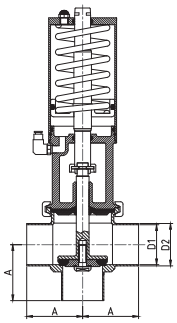

Dimensions • Baumaße

DN	A	B	C	D1	D2	E	L	Rd x s	kg
1"	50,8			22,1	25,4				
1 1/2"	57,2			34,8	38,1				
2"	76,2			47,5	50,8				
2 1/2"	76,2			60,2	63,5				
3"	82,6			72,9	76,2				

Pneumatic actuator S - R
Pneumatik-hubantrieb luft-feder

48320-P45

SMS (NC)

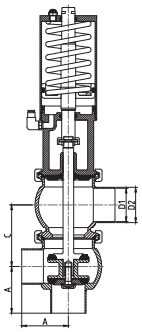

Dimensions • Baumaße

DN	A	B	C	D1	D2	E	L	Rd x s	kg
1"	50,8		56,7	22,1	25,4				
1 1/2"	57,2		80	34,8	38,1				
2"	76,2		92,4	47,5	50,8				
2 1/2"	76,2		120	60,2	63,5				
3"	82,6		128	72,9	76,2				

Butterfly valve with pneumatic actuator 44200 (44150) - variants signaling and control

Scheibenventil mit pneumatischeantriebe 44200 (44150) - varianten signalisierung und kontrolle

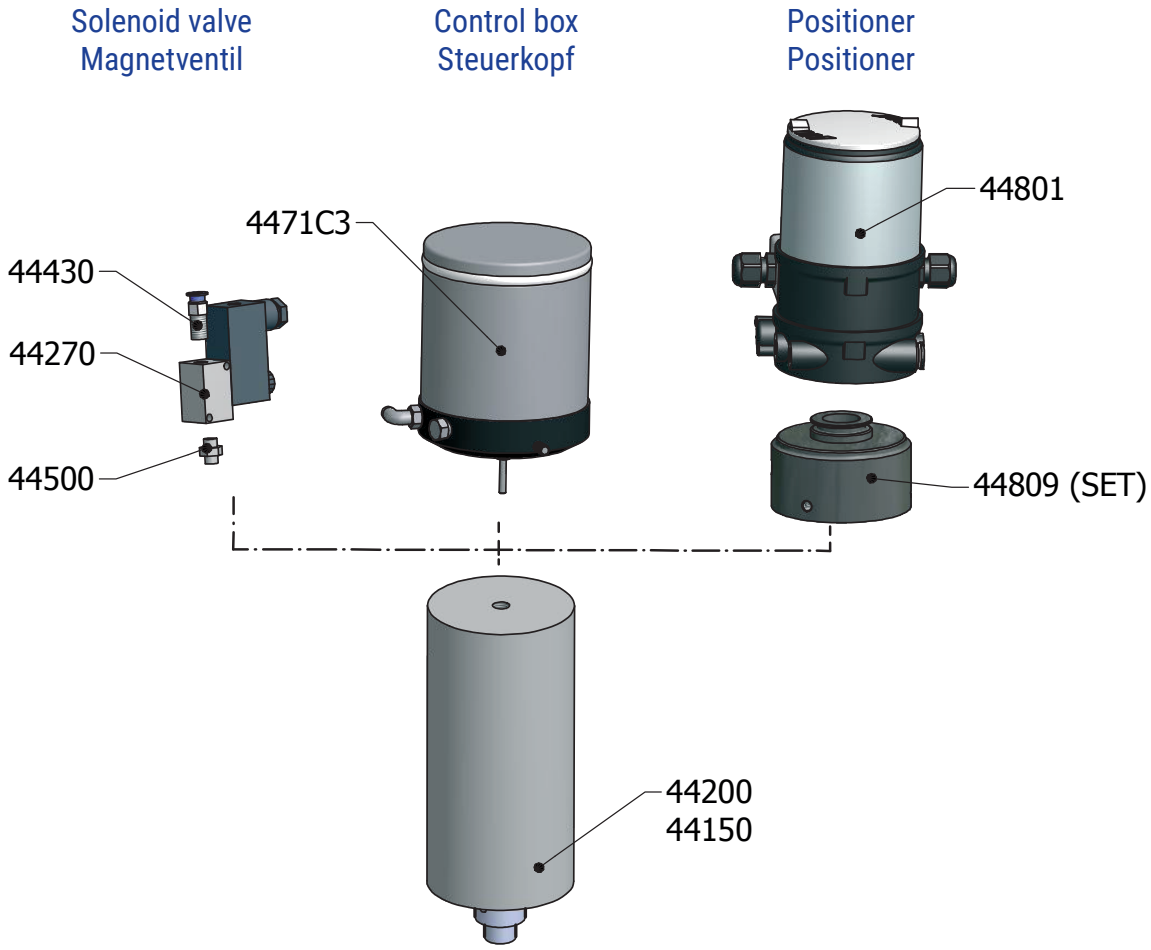

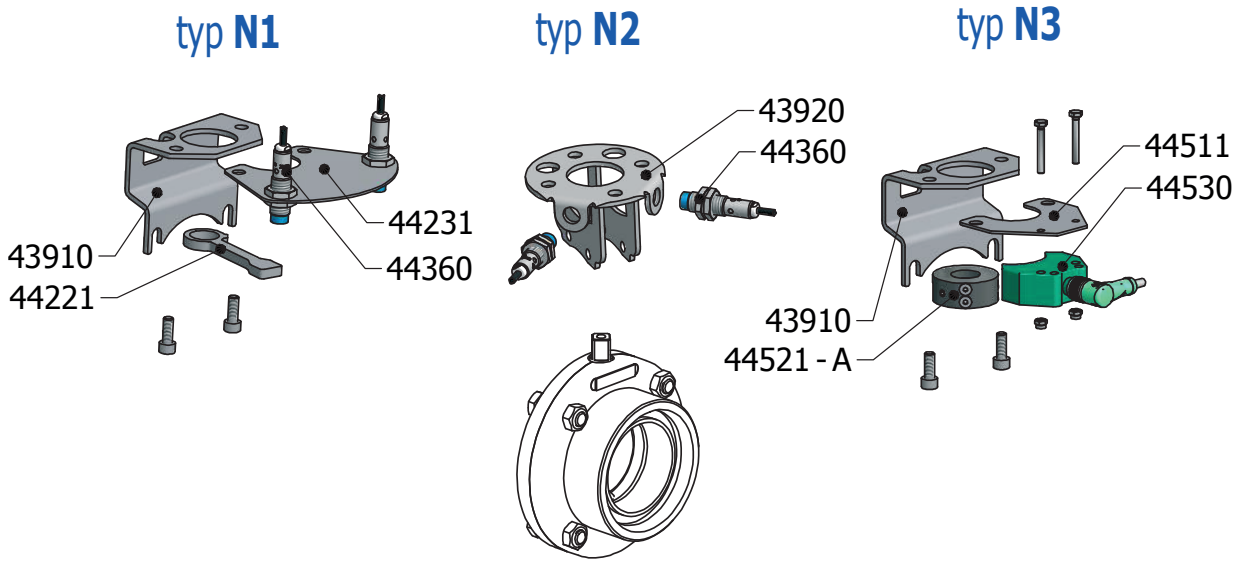

Butterfly valve with pneumatic actuator Air Torque - variants signaling and control

Scheibenventil mit pneumatischeantriebe Air Torque - varianten signalisierung und kontrolle

Position detection – Positionserfassungs

Type A1 Type A2 Type A3

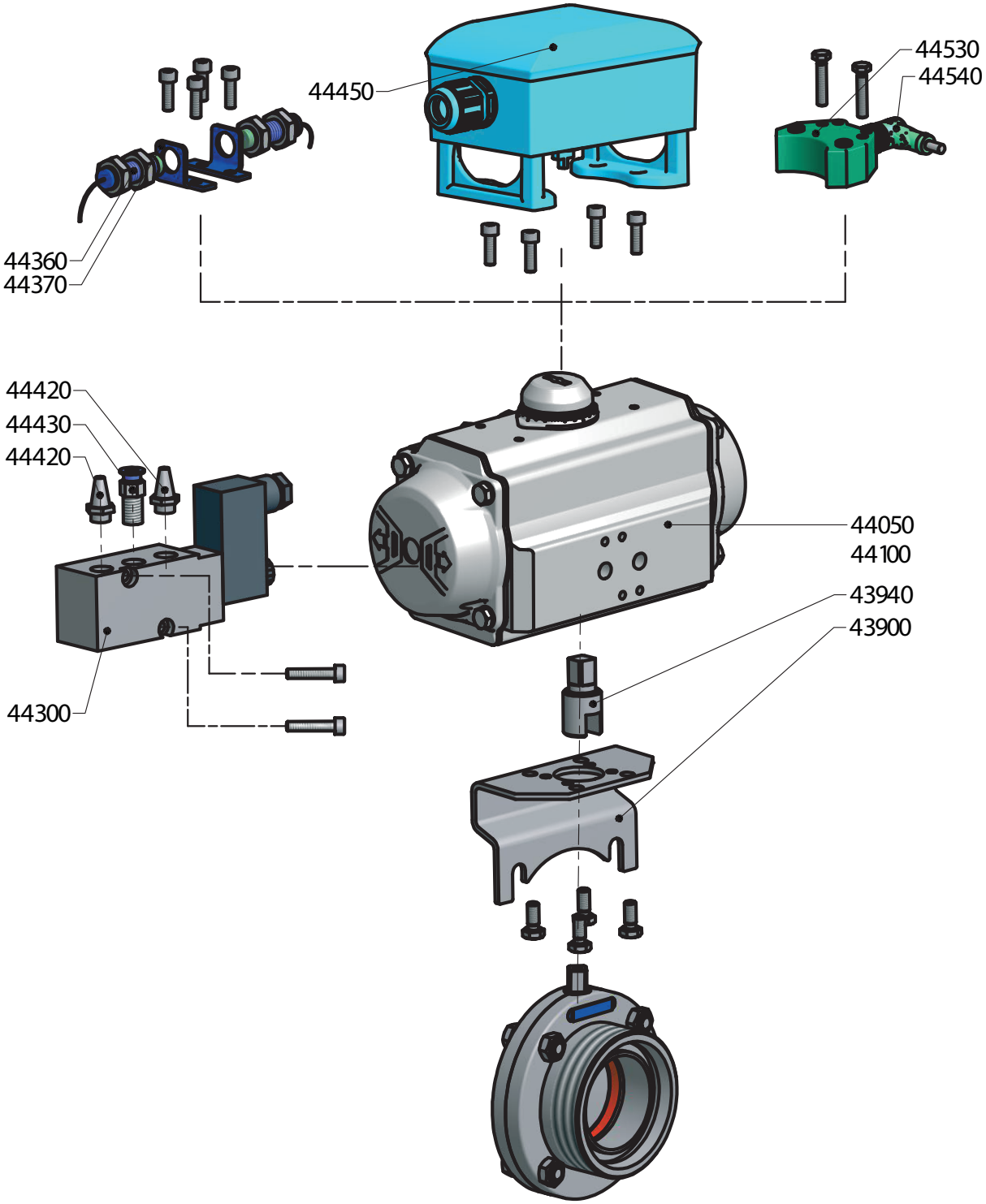

Flap and pneumatic actuator assembly with control head

Klappe und pneumatischer Antrieb mit Steuerkopf

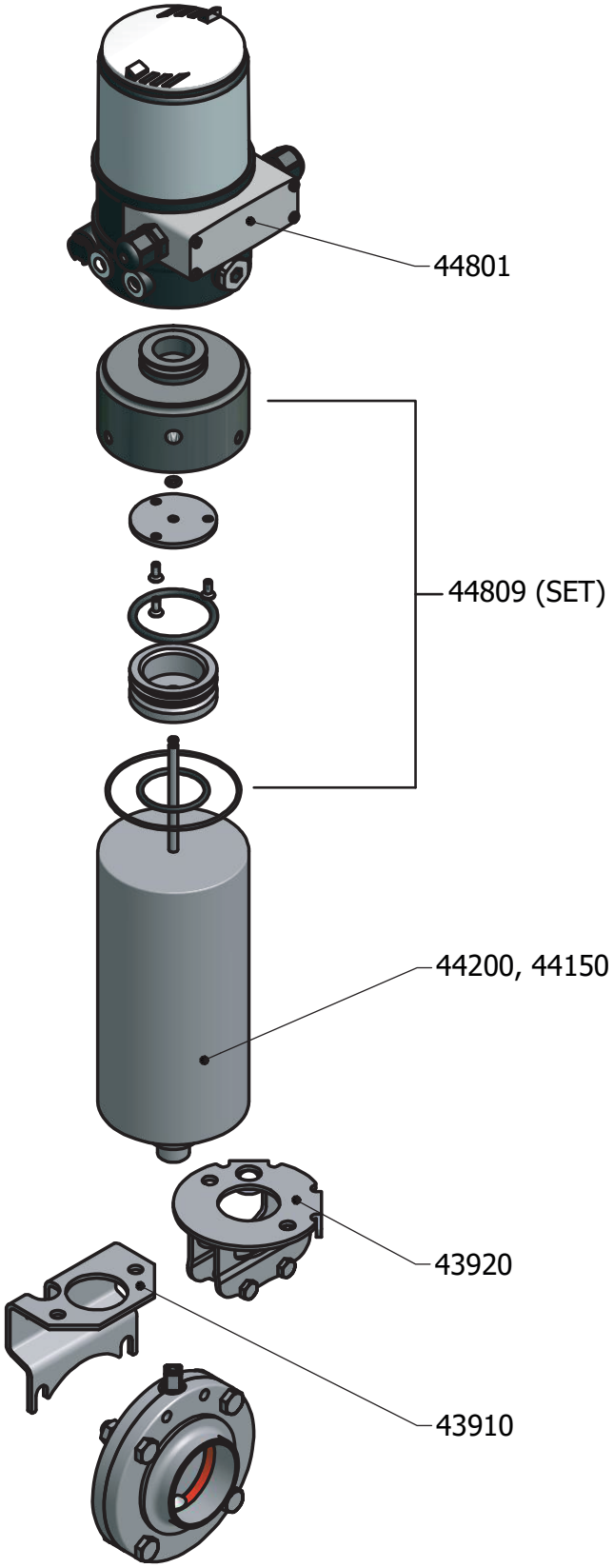

Butterfly valve with electric drive

Scheibenventil mit Elektroantrieb

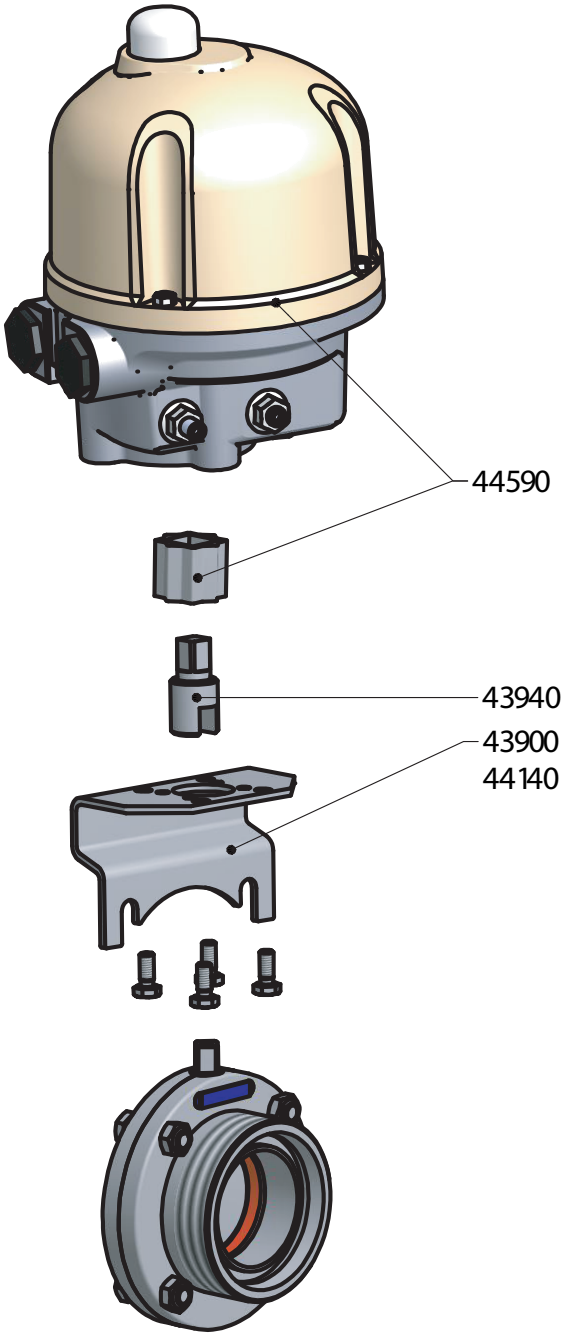

CONVERSION TABLE	UMRECHNUNGSTABELLE	
DN	(inch)	(mm)
8	**1/4"**	**6,35**
10	**3/8"**	**9,25**
15	**1/2"**	**12,7**
20	**3/4"**	**19,0**
25	**1"**	**25,4**
32	**1 1/4"**	**31,7**
40	**1 1/2"**	**38,1**
50	**2"**	**51,0**
65	**2 1/2"**	**63,5**
80	**3"**	**76,1**
100	**4"**	**104,0**

BAR CONVERSION CHARTS	BAR UMPRECHNUNGSTABELLE
1 Bar	100000 Pascals
	100 Kilopascals
	1000 Milibars
	1000000 Microbars
	~0,98 Atmospheres
	~401,46 Inches of wather
	10 Meters of wather
	~29,53 Inches of mercury
	~750 Milimeters of mercury
	~14,5 Pounds per square inches
	~1,02 Kilograms per square inches

MATERIALS USED

All units and parts listed in this catalogue are produced from non-corrosive acid-resistant Cr – Ni steel ČSN 17 240, which is the equivalent of the German standard DIN 1.4301. If the corrosion-proof requirements of the parts are higher they are produced from non-corrosive Cr-Ni-Mo steel ČSN 17 349 which conforms to DIN 1.4404.

Chemical composition of the most frequently used non-corrosive steels

ČSN PN	%C max.	%Si max.	%Mn max.	%P max.	%S max.	%Cr max.	%Mo max.	%Ni max.	%Ti max.
17 240	0.07	1.00	2.00	0.045	0.030	17.0-20.0	-	9.0 -11.5	-
17 249	0.03	1.00	2.00	0.045	0.030	17.0-20.0	-	10.0-12.5	-
17 346	0.07	1.00	2.00	0.045	0.030	16.5-18.5	2.0-2.5	10.5-13.5	-
17349	0.03	1.00	2.00	0.045	0.030	16.5-18.5	2.0-2.5	11.0-14.0	-
17 248	0.10	1.00	2.00	0.045	0.030	17.0-19.0	-	9.5-12.0	>=5xC
17 348	0.10	1.00	2.00	0.045	0.030	16.5-18.5	2.0-2.5	11.0-14.0	>=5xC

International standards conversion table for marking steels

Poldi	Czech Rep. PN	Germany DIN (W. Nr.)	USA ASTM	Italy UNI	France AFNOR	Russia GOST
AKV7	17240	1.4301	AISI 304	X5CrNi1810	Z7CN18-09	08Ch18N10
AKV2	17249	1.4306	AISI304L	X2CrNi1811	Z3CN19-121	03Ch18N11
AKV EX7	17346	1.4401	AISI 316	X5CrNiMo1712.2	Z7CND17-12-02	-
AKV EX2	17349	1.4404	AISI 316L	X2CrNiMo1713.2	Z3CND18-12-02	03Ch12N14M2
AKVS7	17248	1.4541	AISI 321	X6CrNiTi1811	Z6CNT18-10	08Ch18N10T
AKV EX S9	17348	1.4571	AISI 316Ti	X6CrNiMoTi1712	Z6CNDT17-12	08Ch17N13M2

DESIGN

The bulk of products are produced from bars or forged material. The material is in such a state that after welding it is not necessary to carry out further treatment. Tubular adapting pipes in their basic finish are pickled – matt, or treated – ground (brushed).

PIPE CONNECTING PARTS – DIN SCREW COUPLINGS

These are produced according to the DIN 11 851 standard and the screw thread according to the DIN 405 (ČSN 01 4037) standard. Connection of the sockets (screw thread or ring) to the tubes can be done in two ways:

a) butt welding
b) flaring the inside diameter

From diameters of 50 mm and above it is necessary to ensure flaring of connections with a seam weld. Flared connections with a seam weld are hygienically unobjectionable and are suitable for pressures of 1 MPa (tested at a pressure of 2 MPa). Parts which do not correspond to any standards are produced according to branch or factory standards, and possibly workshop standards, and in some cases to approved technical drawings.

SEALING

Seals listed in this catalogue are produced from the following materials – SILICON, PERBUNAN, EPDM or VITON. They are supplied separately or as part of the set. Prices for tubular adapting pipes and sets of screw couplings do not include sealing rings.

MAINTENANCE

Without exception the materials used are suitable for general use in the food-processing industry. These materials are sensitive to high concentrations of chloride solutions and therefore we recommend that the instructions and recom-mendations of the manufacturer are heeded. Corrosion can only be prevented if these instructions are adhered to.

SPECIAL DESIGN

Apart from the standard parts listed in this catalogue we also supply special designs according to customer requirements and their technical documentation.

INSTRUCTIONS FOR ORDERING

For quick and simple processing of your order please supply the following data:

1	2	3	4
numerical labelling of goods	dimension(DN)	material	amount

If group „3" is not listed in the order we automatically supply material 17 240 (DIN 1.4301)

If you require other parts and units than those in this catalogue please send your specific requirements.

This issue nullifies all previous catalogues and delivery conditions listed in them.

We would be pleased to discuss your specific requirements and answer your questions in person. We look forward to your visit.

Technical Information for Gaskets					
Title	**Silicon** (VMQ silicon rubber)	**EPDM** (ethylene-propylene-diene rubber)	**Viton** (FPM fluorine rubber)	**Perbunan** (NBR nitrile rubber)	**PTFE** (polytetrafluorethylene)
Temperature of use	It is stable in water up to 100 °C Possibility of sterilisation by steam short-term up to 120 °C to 130 °C	Permanent operating use from -40 °C to +140 °C Possibility of sterilisation by steam up to 130 °C	Permanent operating use from -20 °C to +200 °C Possibility of sterilisation by steam short-term up to 130 °C to 140 °C	Permanent operating use from -25 °C to +110 °C Possibility of sterilisation by steam short-term up to 130 °C	Up to +200 °C it is physiologically harmless, use from -200 °C to +260 °C
Recommended use	High temperature load capacity It has good resistance to cold, suitable for food, it has dielectric properties. It has good resistance to alcohols.	It has good resistance to swelling for: • Diluted inorganic and organic acids, media, oxidising media, lyes, and ketones • Hot water and steam up to 130 °C	It has good resistance to swelling for: • Mineral oils • Plant and animal oils • Lubricants (also some additives) • Fuels	It has good resistance to swelling for: • Aliphatic hydrocarbons (such as propane, butane, benzine, mineral oil) • Lubricants based on mineral oil	It has good resistance to swelling in almost all parts It has a smooth and repellent surface so sticking does not occur It has better chemical resistance than in all other elastomers Non-flammable material
Limited use (border)	Shows high swelling for: • Low-molecular esters and ethers • Aliphatic and aromatic hydrocarbons • Concentrated acids and alkali	Cannot be used for: • Plant and animal oils • Aliphatic, aromatic, and chlorinated hydrocarbons • Mineral oils	Shows high swelling for: • Polar solvents, such as acetone, methyl ketone, ethyl acetate, diethyl ether, and dioxane • Low-molecular organic acids (formic acid and acetic acid) • Gaseous ammonia, amines and alkanes • Overheated water steam	Not resistant to: • Polar solvents • Chlorinated hydrocarbons • Ketones • Aromatic hydrocarbons (benzol) • Esters	Not resistant to: • Liquid alkaline metals and some compounds of fluorine in connection with higher pressure and temperature The material does not show the flexibility of rubber.
Material approval	BGA/FDA	BGA/FDA	BGA/FDA	BGA/FDA	BGA/FDA

BGA = approval of the "Federal Health Authority" in Germany ("Bundesgesundheitsamt")
FDA = approval of the "US Food and Drug Administration"

Technische Informationen für Dichtringe					
Name	**Silikon** (VMQ)	**EPDM** (Ethylen-Propylen-Dien-Kautschuk)	**Viton** (FPM)	**Perbunan** (NBR)	**PTFE** (Polytetrafloutäthylen)
Einsatztemperatur	in Wasser bis 100 °C beständig Dampfsterilisierbar kurzfristig bis 120 °C - 130 °C	Dauereinsatz von minus 40 °C bis 140 °C Dampfsterilisierbar bis 130 °C	Dauereinsatz von minus 20 °C bis 200 °C Dampfsterilisierbar kurzfristig bis 130 °C - 140 °C	Dauereinsatz von minus 25 °C bis 110 °C Dampfsterilisierbar kurzfristig bis 130 °C	bis 200 °C physiologisch unbedenklich, Einsatz von -200 °C bis +260 °C
typ. Einsatzbereich	hohe thermische Belastbarkeit gute Kältebeständigkeit, für lebensmittel gut geeignet, dielektrische Eigensohaften gute Beständigkeit gegenüber Alkoholen	gute Quellbeständigkeit bei: • verdünnte anorg.- und organische Säuren, Medien, oxidierend wirkende Medien, Laugen und Kentonen • in Heißwasser und Dampf bis 130 °C	gute Quellbeständigkeit bei: • Mineralölen • pflanzlichen und tierischen Olen • Fetten (auch bestimmte Additive) • Kraftstoffe	gute Quellbeständigkeit • aliphatisohen Kohlenwasserstoffen (wie Propan, Butan, Benzin, Mineralölen) • Fett auf Mineralolbasis	gute Quellbeständigkeit in nahezu allen Teilen Oberfläche glatt und abweisend, dadurch kein Haften von Růckständen chemische Beständigkeit besser als bei allen anderen Elastomeren kaum brennbar
Einsatzgrenzen	hohe Quellung bei: • niedermolekularen Estem und Ethern • aliphatischen und aromatischen Kohlenwasserstoffen • konz. Säuren und Akalien	nicht einzusetzen bei: • pflanzlichen und tierischen Olen • aliphatischen aromatischen und chlorierten kohlenwasserstoffen • Mineralöle	stark quellend bei: • polaren Lösungsmitteln wie Aceton, Methylketon, Ethylacetat, Diethylether u. Dioxane • niedermolekularen organ. Säuren (Ameisen - und Essigsäuren) • Ammoniakgase, Amine u. Alkanien • überhitzter Wasserdampf	nicht beständig bei: • polaren Lösungsmitteln • chlorierten Kohlenwasserstoffen • Ketone • Aromaten (Benzol) • Ester	nicht beständig bei: • flůssigen Alkalimetallen und einigen Flourverbindungen in Verbindung mit hohem Druck und Temperatur kein gummielastischer Werkstoff
Werkstoffzulassung	BGA/FDA	BGA/FDA	BGA/FDA	BGA/FDA	BGA/FDA

BGA = Bundesgesundheitsamt
FDA = US Food and Drug Administration

NIOB FLUID

PRODUCER OF STAINLESS PIPPING SYSTEMS

HERSTELLER VON EDELSTAHLARMATUREN

NIOB FLUID s. r. o.
Ostrožská 1003
687 25 Hluk
Czech Republic

Phone: +420 572 419 822 - 8
Fax: +420 572 419 868
E-mail: marketing@niobfluid.cz

www.niobfluid.cz