NIOB FLUID

PRODUCER OF STAINLESS PIPING SYSTEMS

08

DOUBLE - WALLED PIPING SYSTEMS

www.niobfluid.cz

04/2026

NIOB FLUID

Double - Walled Piping Systems

NIOB FLUID

Double - Walled Piping Systems

Heated fittings in the food processing industry must be used in the operations, where the transported food material contains substances (fats), which set solid at common room temperatures, or which feature high viscosity, which prevents their transport through piping at temperatures approximately 20°C.

The heated fittings are classified to two groups:

- Heated sections of piping (pipes, bends, T-parts)
- Heated control fittings (flaps, ball valves) and special sections of piping, such as filters.

All fittings with heating feature double housing, through which the hot water passes. The water goes to the heated space through the connecting fittings, usually sleeves (G 3/8“, G 1/2“ or G 3/4“). The outer housing features always two connecting fittings (usually sleeves), one for inlet and one for outlet of the hot water, to enable flow of the hot water along the heated section of the piping.

For connection of the hot water, the heated fittings of sizes DN 25 - DN 32 use the connection fittings of clearance G 3/8“, sizes DN 40 - DN 65 use the connection fittings of clearance G 1/2“, and the fittings of the nominal size DN 80 - DN 100 use the connection fittings of clearance G 3/4“.

TUBES

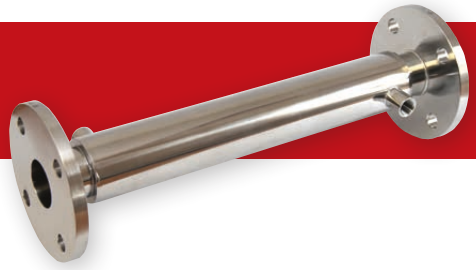

DIN

13010 Tube S - S

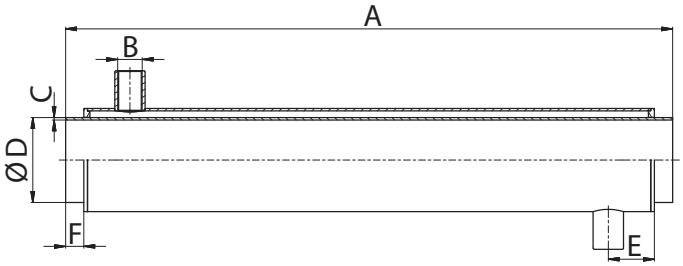

Dimensions

DN	A	B muff	C	D	E	F
25	200 - 6000	3/8"	1,5	29	38	15
32		3/8"	1,5	35	38	15
40		1/2"	1,5	41	38	15
50		1/2"	1,5	53	38	15
65		1/2"	2	70	38	15
80		3/4"	2	85	38	15
100		3/4"	2	104	38	15

13020 Tube KM - G

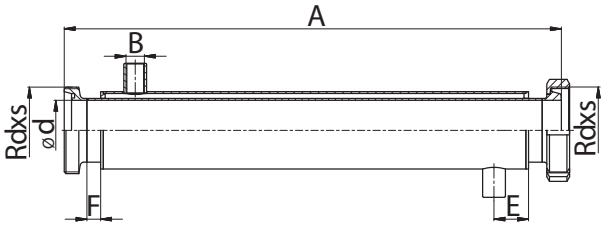

Dimensions

DN	A	B muff	C	D	E	F	Rdxs
25	200 - 6000		1,5	29	38	15	52x1/6"
32		3/8"	1,5	35	38	15	58x1/6"
40		1/2"	1,5	41	38	15	65x1/6"
50		1/2"	1,5	53	38	15	78x1/6"
65		1/2"	2	70	38	15	95x1/6"
80		3/4"	2	85	38	15	110x1/4"
100		3/4"	2	104	38	15	130x1/4"

13040 Tube PN - PN

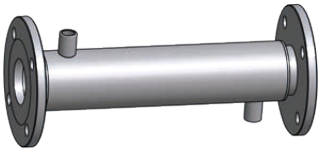

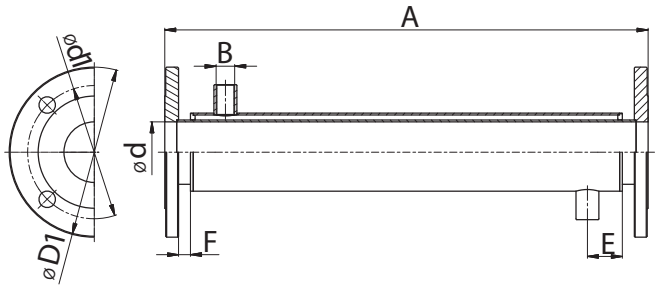

Dimensions

DN	A	B muff	d	d1	D1	E	F
25	200-6000	3/8"	26	84x4	115	38	13
32		3/8"	32	100x4	140	38	13
40		1/2"	38	110x4	150	38	13
50		1/2"	50	125x4	165	38	13
65		1/2"	66	145x4	185	38	13
80		3/4"	81	160x8	200	38	13
100		3/4"	100	180x8	220	38	13

13050 Tube C - C

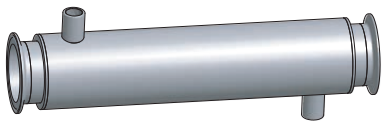

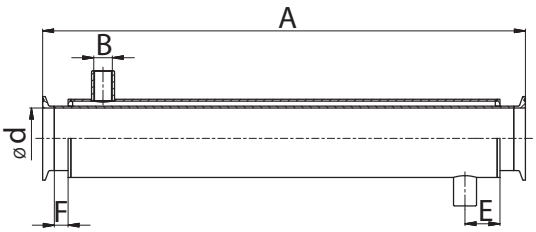

Dimensions

DN	A	B muff	C	d	E	F
25	200 - 6000	3/8"	1,5	29	38	15
32		3/8"	1,5	35	38	15
40		1/2"	1,5	41	38	15
50		1/2"	1,5	53	38	15
65		1/2"	2	70	38	15
80		3/4"	2	85	38	15
100		3/4"	2	104	38	15

BEND

DIN

33010 Bend S - S

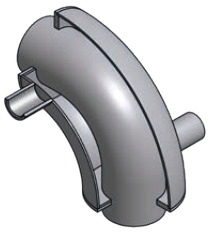

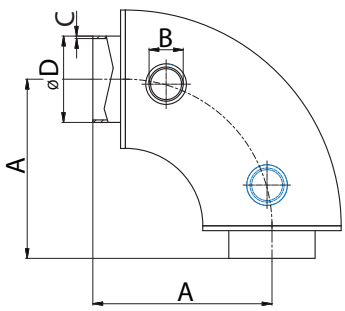

Dimensions

DN	A	B muff	C	D
25	90	3/8"	1,5	29
32	95	3/8"	1,5	35
40	100	1/2"	1,5	41
50	110	1/2"	1,5	53
65	120	1/2"	2	70
80	145	3/4"	2	85
100	155	3/4"	2	104

33021 Bend KM - G

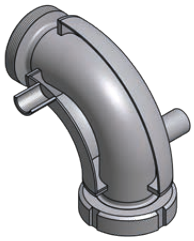

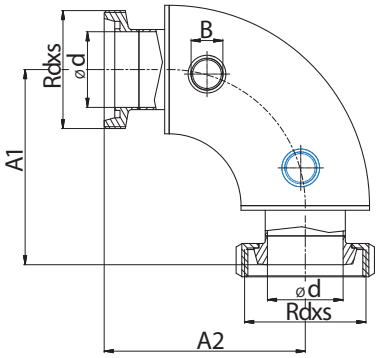

Dimensions

DN	A1	A2	Rdxs	B muff	d
25	108	112	52x1/6"	3/8"	26
32	113	117	58x1/6"	3/8"	32
40	118	122	65x1/6"	1/2"	38
50	129	133	78x1/6"	1/2"	50
65	141	145	95x1/6"	1/2"	66
80	166	170	110x1/4"	3/4"	81
100	180	185	130x1/4"	3/4"	100

33048 Bend PN - PN

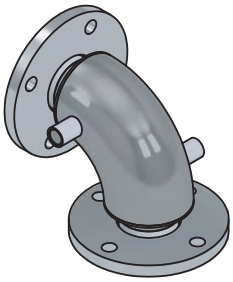

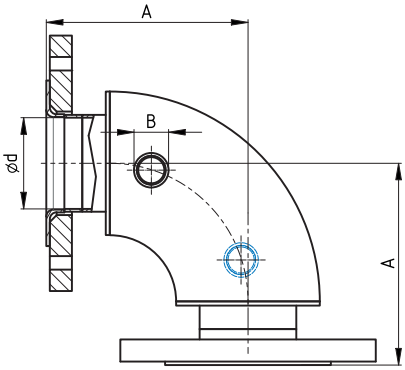

Dimensions

DN	A	B muff	d
40	129	1/2"	38
50	136	1/2"	50
65	146	1/2"	66
80	143	3/4"	81
100	181	3/4"	100

33050 Bend C - C

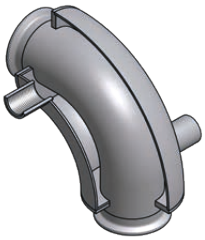

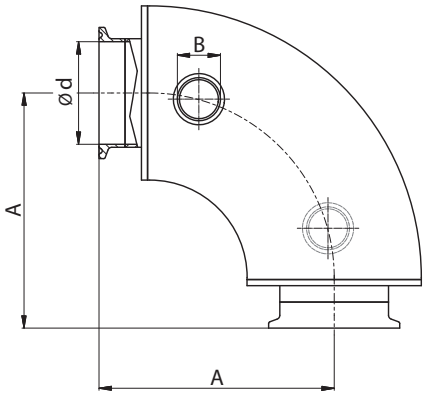

Dimensions

DN	A	B muff	d
25	102,7	3/8"	26
32	107,7	3/8"	32
40	112,7	1/2"	38
50	122,7	1/2"	50
65	132,7	1/2"	66
80	157,7	3/4"	81
100	170,8	3/4"	100

TEE

DIN

33410 Tee S - S - S

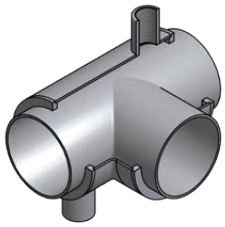

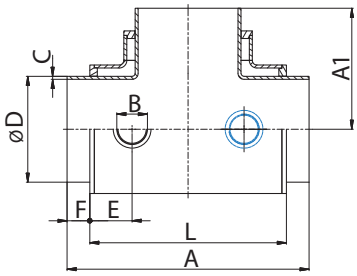

Dimensions

DN	A	A1	B muff	C	D	E	F	L
25	100	50	3/8"	1,5	29	23	15	70
32	110	55	3/8"	1,5	35	23	15	80
40	120	60	1/2"	1,5	41	23	15	90
50	140	70	1/2"	1,5	53	23	15	110
65	160	80	1/2"	2	70	23	15	130
80	180	90	3/4"	2	85	23	15	150
100	200	100	3/4"	2	104	23	15	170

33423 Tee G - KM - G

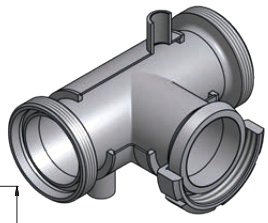

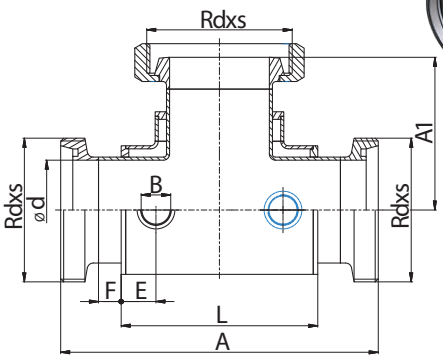

Dimensions

DN	A	A1	B muff	D	E	F	L	Rdxs
25	144	68	3/8"	26	23	15	70	52x1/6"
32	154	73	3/8"	32	23	15	80	58x1/6"
40	164	78	1/2"	38	23	15	90	65x1/6"
50	186	89	1/2"	50	23	15	110	78x1/6"
65	210	101	1/2"	66	23	15	130	95x1/6"
80	230	111	3/4"	81	23	15	150	110x1/4"
100	260	125	3/4"	100	23	15	170	130x1/4"

33435 Tee PN - PN - PN

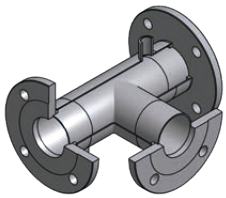

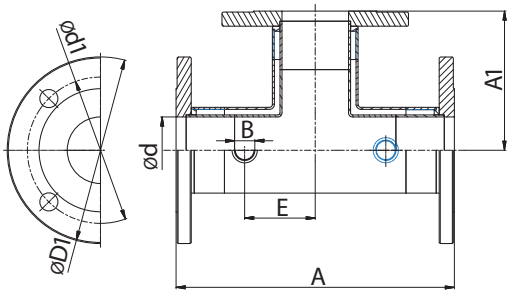

Dimensions

DN	A	A1	B muff	d	d1	D1	E
25	144	68	3/8"	26	85x4	115	40
32	154	73	3/8"	32	100x4	140	50
40	164	78	1/2"	38	110x4	150	60
50	186	89	1/2"	50	125x4	165	60
65	210	101	1/2"	66	145x4	185	70
80	230	111	3/4"	81	160x8	200	75
100	260	125	3/4"	100	180x8	220	132

33454 Tee C - C - C

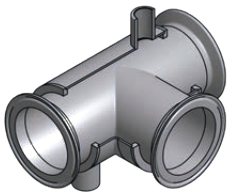

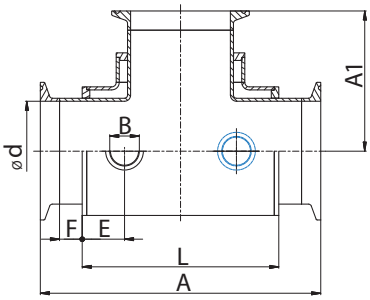

Dimensions

DN	A	A1	B muff	d	E	F	L
25	125,4	62,7	3/8"	26	23	15	70
32	135,4	67,7	3/8"	32	23	15	80
40	145,4	72,7	1/2"	38	23	15	90
50	165,4	82,7	1/2"	50	23	15	110
65	185,4	92,7	1/2"	66	23	15	130
80	205,4	102,7	3/4"	81	23	15	150
100	231,6	115,8	3/4"	100	23	15	170

DOUBLE - WALLED PIPING SYSTEMS

DIN

33620 Reducing piece concentric S - S

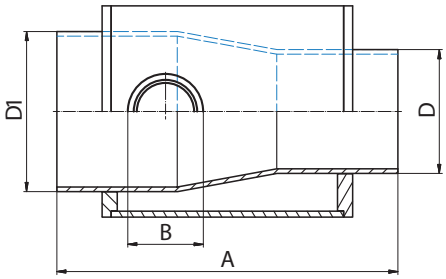

Dimensions

DN	A	B muff	D	D1
32/25	80	3/8"	29	35
40/25	102	1/2"	29	41
40/32	88	1/2"	35	41
50/25	115	1/2"	29	53
50/32	129	1/2"	35	53
50/40	113	1/2"	41	53
65/32	125	1/2"	35	70
65/40	120	1/2"	41	70

Dimensions

DN	A	B muff	D	D1
65/50	130	1/2"	53	70
80/40	140	3/4"	41	85
80/50	125	3/4"	53	85
80/65	120	3/4"	70	85
100/50	160	3/4"	53	104
100/65	127	3/4"	70	104
100/85	120	3/4"	85	104

40210-H Three way ball cock G - G - G

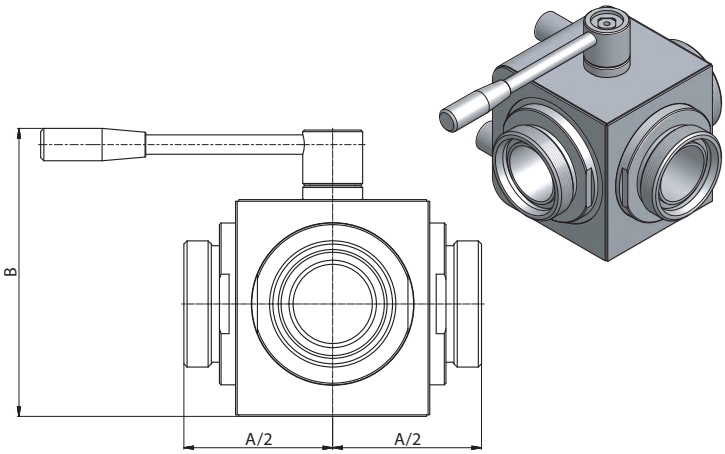

Dimensions

DN	A/2	B	Connection
50	92	178	Muff 1/2"
65	100	208	Muff 1/2"
80	128	252,5	Muff 3/4"

33810 Tee reduced long S - S - S

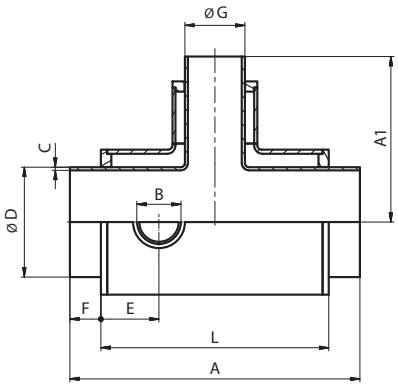

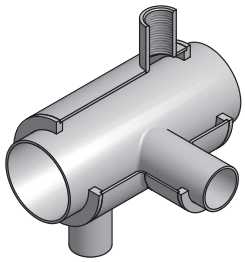

Dimensions

DN	A	A1	B muff	C	D	E	F	G	L
32/25	110	55	3/8"	1,5	35	23	15	29	74
40/15	120	60	1/2"	1,5	41	23	15	19	84
40/20	120	60	1/2"	1,5	41	23	15	23	84
40/25	120	60	1/2"	1,5	41	23	15	29	84
40/32	120	60	1/2"	1,5	41	23	15	35	84
50/20	140	70	1/2"	1,5	53	23	15	23	104
50/25	140	70	1/2"	1,5	53	23	15	29	104
50/32	140	70	1/2"	1,5	53	23	15	35	104
50/40	140	70	1/2"	1,5	53	23	15	41	104
65/25	160	80	1/2"	2,0	70	23	15	29	124
65/32	160	80	1/2"	2,0	70	23	15	35	124
65/40	160	80	1/2"	2,0	70	23	15	41	124
65/50	160	80	1/2"	2,0	70	23	15	53	124
80/40	180	80	3/4"	2,0	85	23	15	41	144
80/50	180	80	3/4"	2,0	85	23	15	53	144
80/65	180	80	3/4"	2,0	85	23	15	70	144
100/50	200	100	3/4"	2,0	104	23	15	53	164
100/65	200	100	3/4"	2,0	104	23	15	70	164
100/80	200	100	3/4"	2,0	104	23	15	85	164

BALL COCK

DIN

4051H Ball cock S - S

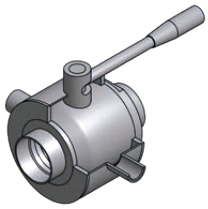

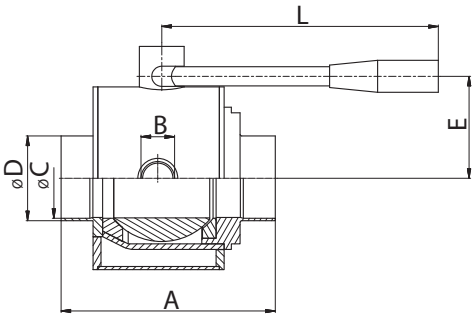

Dimensions

DN	A	B muff	C	D	E	L
25	86	3/8"	26	31	44	117
32	109	3/8"	32	37	50	146
40	124	1/2"	38	43	64	185
50	135	1/2"	50	55	68	185
65	161	1/2"	66	72	95	243
80	180	3/4"	81	87	104	243
100	204	3/4"	100	106	122	273

4053H Ball cock G - G

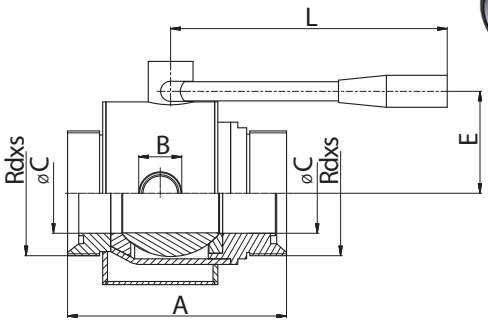

Dimensions

DN	A	B muff	C	Rdxs	E	L
25	97	3/8"	26	52x1/6"	44	146
32	113	3/8"	32	58x1/6"	50	146
40	127	1/2"	38	65x1/6"	64	185
50	134	1/2"	50	78x1/6"	68	185
65	161	1/2"	66	95x1/6"	95	243
80	180	3/4"	81	110x1/4"	104	243
100	204	3/4"	100	130x1/4"	122	273

4055H Ball cock G - MK

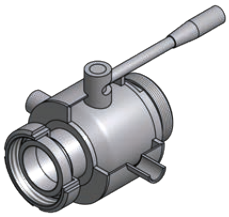

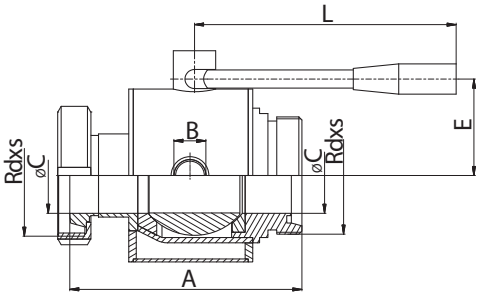

Dimensions

DN	A	B muff	C	Rdxs	E	L
25	92	3/8"	26	52x1/6"	44	146
32	109	3/8"	32	58x1/6"	50	146
40	127	1/2"	38	65x1/6"	64	185
50	137	1/2"	50	78x1/6"	68	185
65	161	1/2"	66	95x1/6"	95	243
80	180	3/4"	81	110x1/4"	104	243
100	204	3/4"	100	130x1/4"	122	273

4051H-P05 / P10

Ball cock with pneumatic actuator

BUTTERFLY VALVE

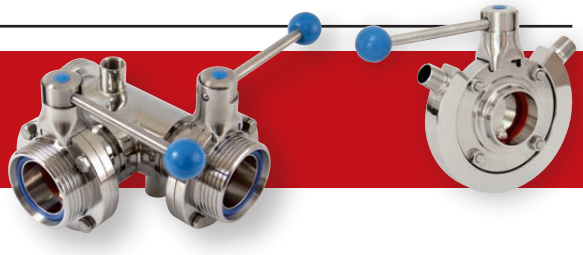

DIN

4301H Butterfly valve S - S

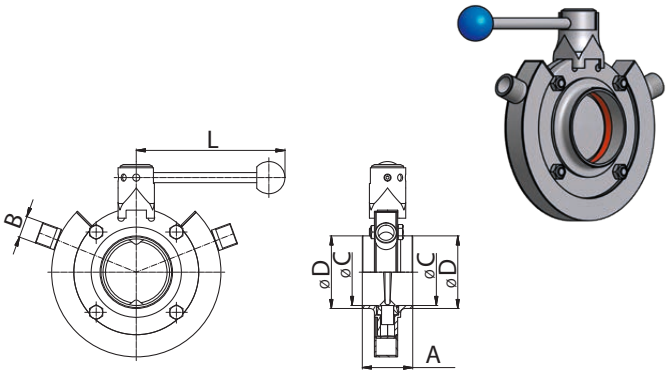

Dimensions

DN	A	B nipple	C	D	L
25	40	3/8"	26	31	102,5
32	42	3/8"	32	37	102,5
40	50	1/2"	38	43	147,5
50	50	1/2"	50	55	147,5
65	50	1/2"	66	72	147,5
80	60	3/4"	81	87	180
100	64	3/4"	100	106	180

4303H Butterfly valve G - G

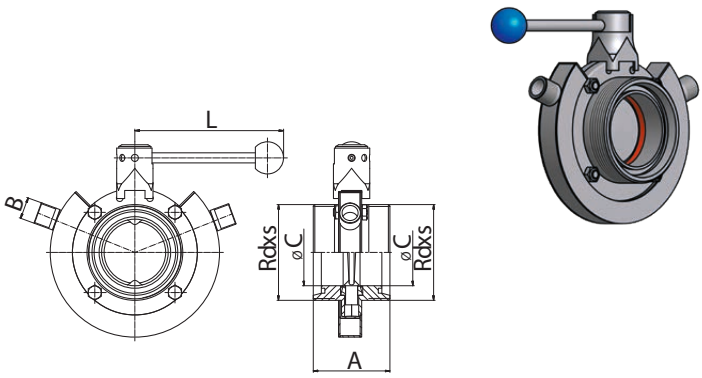

Dimensions

DN	A	B nipple	C	Rdxs	L
25	63	3/8"	26	52x1/6"	102,5
32	64	3/8"	32	58x1/6"	102,5
40	72	1/2"	38	65x1/6"	147,5
50	72	1/2"	50	78x1/6"	147,5
65	76	1/2"	66	95x1/6"	147,5
80	100	3/4"	81	110x1/4"	180
100	104	3/4"	100	130x1/4"	180

4304H Butterfly valve G - KM

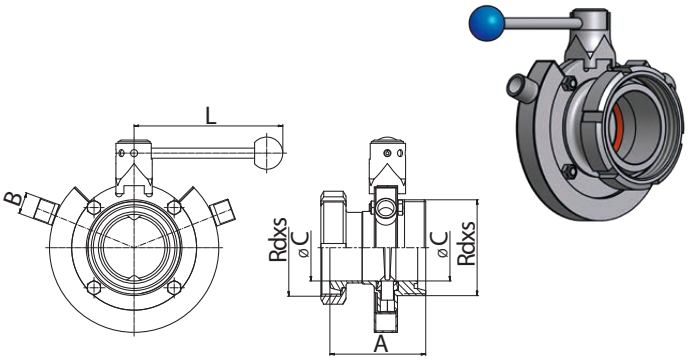

Dimensions

DN	A	B nipple	C	Rdxs	L
25	74	3/8"	26	52x1/6"	102,5
32	78	3/8"	32	58x1/6"	102,5
40	87	1/2"	38	65x1/6"	147,5
50	89	1/2"	50	78x1/6"	147,5
65	95	1/2"	66	95x1/6"	147,5
80	117	3/4"	81	110x1/4"	180
100	128	3/4"	100	130x1/4"	180

Type of conection

4301 H - A

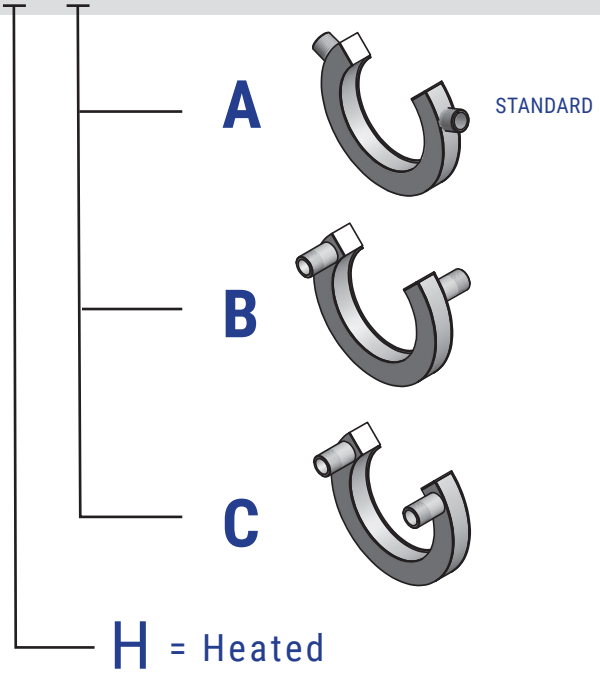

BUTTERFLY VALVE WITH PNEUMATIC ACTUATOR

DIN

4301H-P10 / P05

Butterfly valve S - S
with pneumatic actuator - horizontal

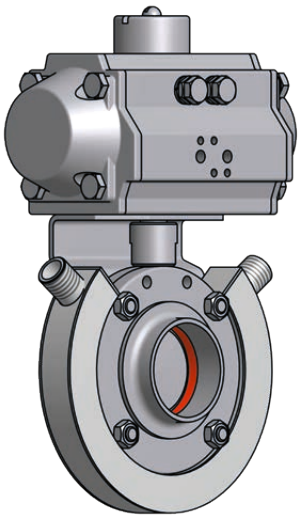

4303H-P05 / P10

Butterfly valve G - G
with pneumatic actuator - horizontal

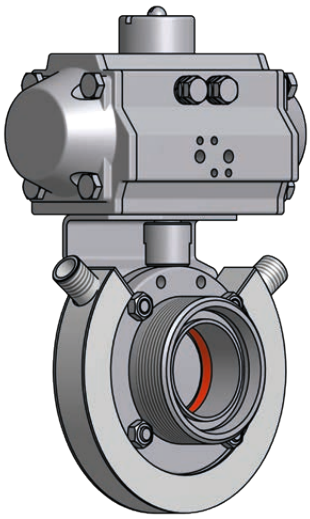

4304H-P05 / P10

Butterfly valve G - KM
with pneumatic actuator - horizontal

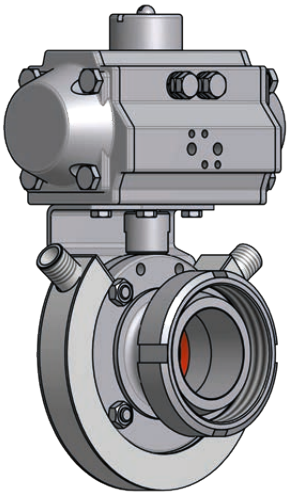

4315H

Three way butterfly valve G - G - G

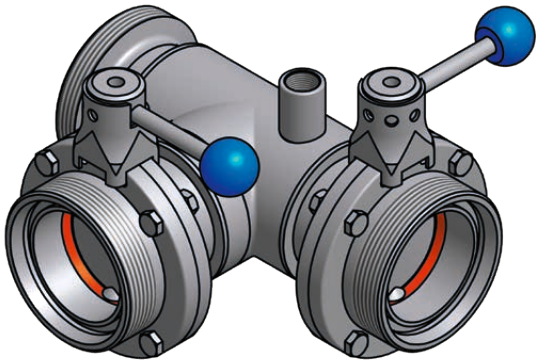

BUTTERFLY VALVE WITH PNEUMATIC ACTUATOR

DIN

4301H-P15 / P20

Butterfly valve S - S
with pneumatic actuator - vertical

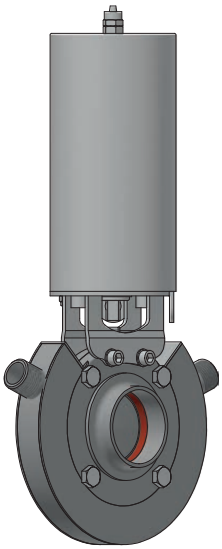

4303H-P15 / P20

Butterfly valve G - G
with pneumatic actuator - vertical

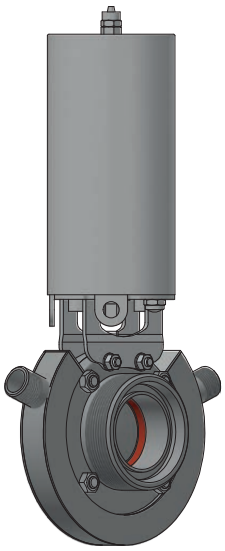

4304H-P15 / P20

Butterfly valve G - KM
with pneumatic actuator - vertical

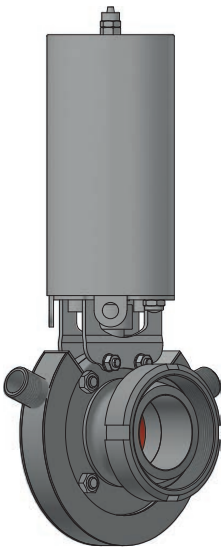

NON RETURN VALVE

DIN

5080D-H Non return valve S - S

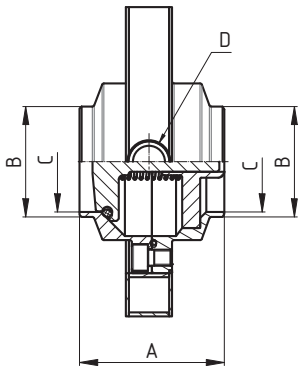

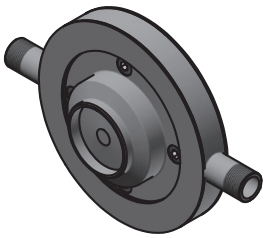

Dimensions

DN	A	B	C	D nipple
25	64	31	26	3/8"
32	66	37	32	3/8"
40	72	43	38	1/2"
50	72	55	50	1/2"
65	76	72	66	1/2"
80	96	87	81	3/4"
100	104	106	100	3/4"

5083D-H Non return valve G - G

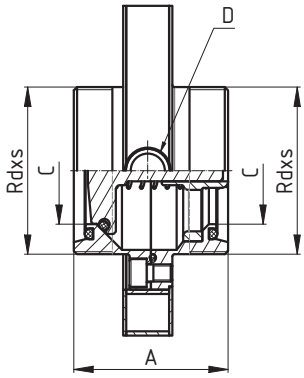

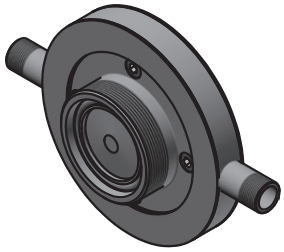

Dimensions

DN	A	C	D nipple	Rdxs
25	64	26	3/8"	52x1/6"
32	66	32	3/8"	58x1/6"
40	72	38	1/2"	65x1/6"
50	72	50	1/2"	78x1/6"
65	76	66	1/2"	95x1/6"
80	96	81	3/4"	110x1/4"
100	104	100	3/4"	130x1/4"

5084D-H Non return valve G - KM

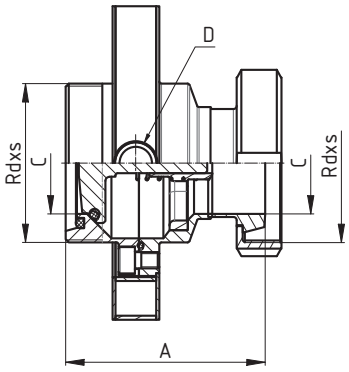

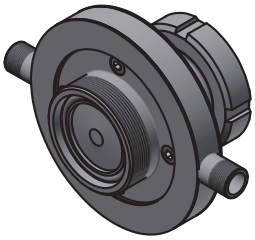

Dimensions

DN	A	C	D nipple	Rdxs
25	84	26	3/8"	52x1/6"
32	89	32	3/8"	58x1/6"
40	96	38	1/2"	65x1/6"
50	98	50	1/2"	78x1/6"
65	106	66	1/2"	95x1/6"
80	131	81	3/4"	110x1/4"
100	146	100	3/4"	130x1/4"

5089D-H Non return valve C - C

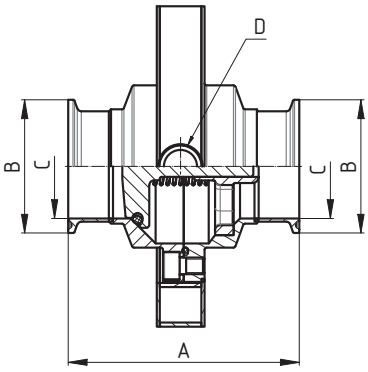

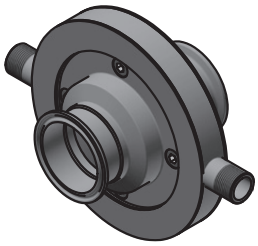

Dimensions

DN	A	B	C	D nipple
25	103	50,5	26	3/8"
32	105	50,5	32	3/8"
40	111	50,5	38	1/2"
50	111	65	50	1/2"
65	128	91	66	1/2"
80	148	106	81	3/4"
100	156	119	100	3/4"

DIRECT FILTERS, DOUBLE SHELL

DIN

53431-H Dirt trap direct S - S

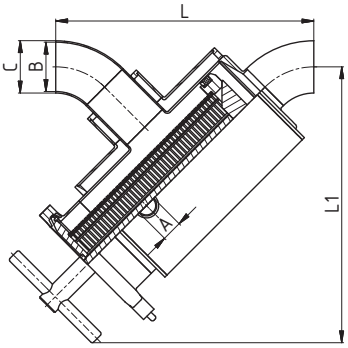

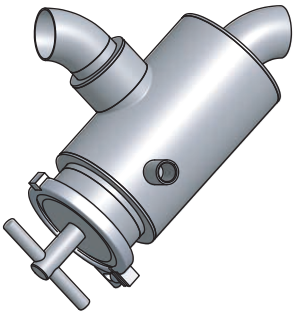

Dimensions

DN	A muff	B	C	L	L1
25	3/8"	26	29	203,6	223,6
40	1/2"	38	41	217,8	226,5
50	1/2"	50	53	261,6	279,7
65	1/2"	66	70	278,6	284
80	3/4"	81	85	332,3	343,2
100	3/4"	100	104	346,5	346,1

53432-H Dirt trap direct G - G

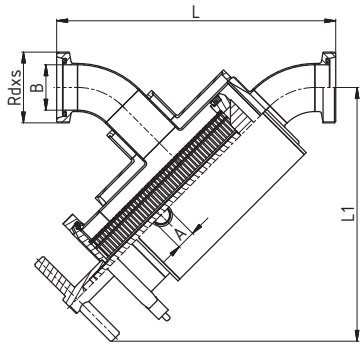

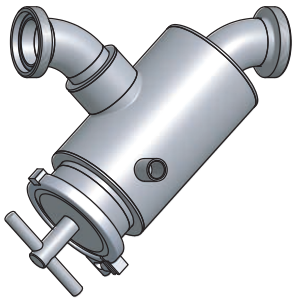

Dimensions

DN	A muff	B	Rdxs	L	L1
25	3/8"	26	52x1/6"	247,6	223,6
40	1/2"	38	65x1/6"	261,8	226,5
50	1/2"	50	78x1/6"	307,6	279,7
65	1/2"	66	95x1/6"	328,6	284
80	3/4"	81	110x1/4"	384,3	343,2
100	3/4"	100	130x1/4"	406,5	346,1

53433-H Dirt trap direct K/M - K/M

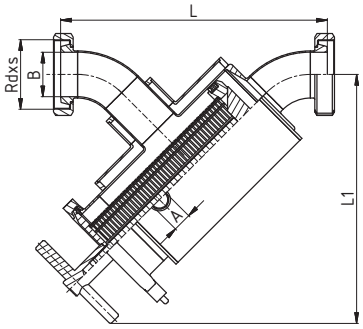

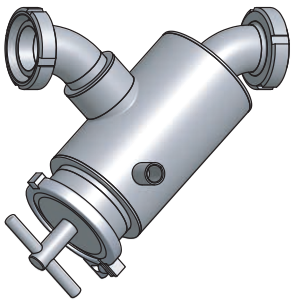

Dimensions

DN	A muff	B	Rdxs	L	L1
25	3/8"	26	52x1/6"	239,6	223,6
40	1/2"	38	65x1/6"	253,8	226,5
50	1/2"	50	78x1/6"	299,6	279,7
65	1/2"	66	95x1/6"	320,6	284
80	3/4"	81	110x1/4"	374,3	343,2
100	3/4"	100	130x1/4"	396,5	346,1

53435-H Dirt trap direct C - C

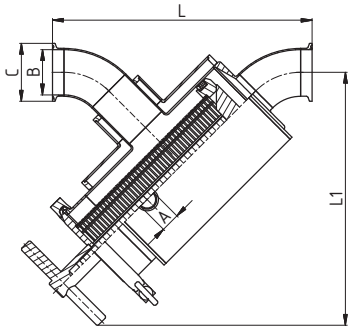

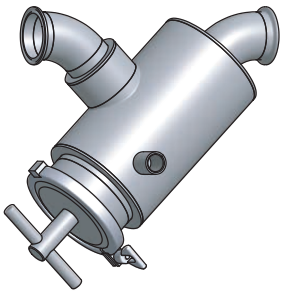

Dimensions

DN	A muff	B	C	L	L1
25	3/8"	26	29	229	223,6
40	1/2"	38	41	243,2	226,5
50	1/2"	50	53	287	279,7
65	1/2"	66	70	304	284
80	3/4"	81	85	357,7	343,2
100	3/4"	100	104	378,1	346,1

CORNER FILTERS, DOUBLE SHELL

DIN

53451-H Corner filter S - S

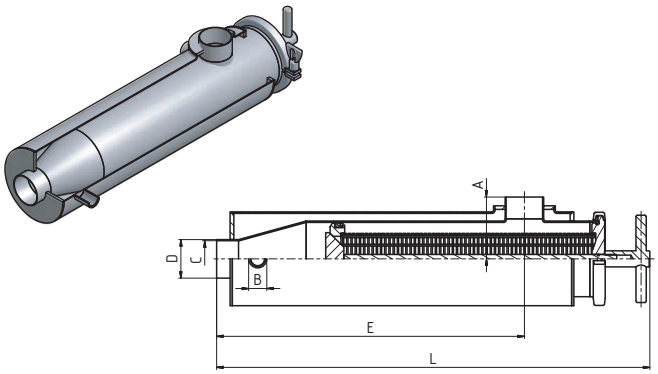

Dimensions

DN	A	B muff	C	D	E	L
25	63	3/8"	26	29	410	557,5
32	63	3/8"	32	35	399,5	547
40	63	1/2"	38	41	387	534,5
50	85	1/2"	50	53	423	595,5
65	85	1/2"	66	70	391	563,5
80	130	3/4"	81	85	564	770
100	130	3/4"	100	104	525	731

53452-H Corner filter G - G

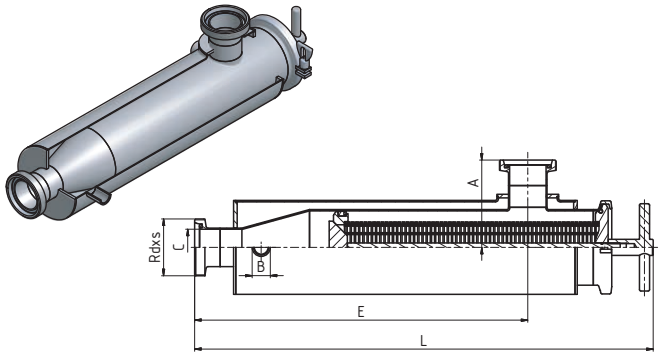

Dimensions

DN	A	B muff	C	D	E	L
25	92	3/8"	26	29	439	586,5
32	95	3/8"	32	35	431,5	579
40	96	1/2"	38	41	420	567,5
50	120	1/2"	50	53	458	630,5
65	125	1/2"	66	70	431	603,5
80	175	3/4"	81	85	609	815
100	184	3/4"	100	104	579	785

53453-H Corner filter K/M - K/M

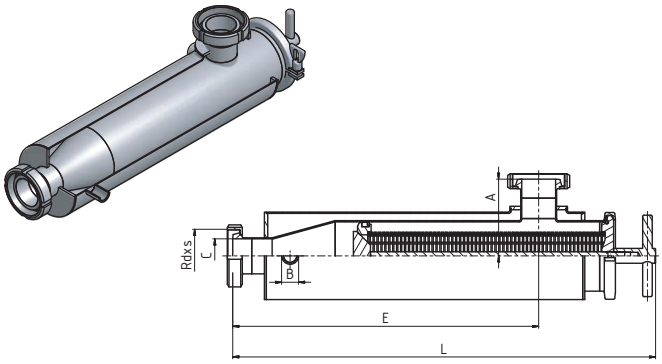

Dimensions

DN	A	B muff	C	D	E	L
25	**85**	3/8"	26	29	432	579,5
32	**88**	3/8"	32	35	424,5	573
40	**89**	1/2"	38	41	413	560,5
50	**113**	1/2"	50	53	451	623,5
65	**117**	1/2"	66	70	423	595,5
80	**167**	3/4"	81	85	601	807
100	**174**	3/4"	100	104	569	775

53455-H Corner filter C - C

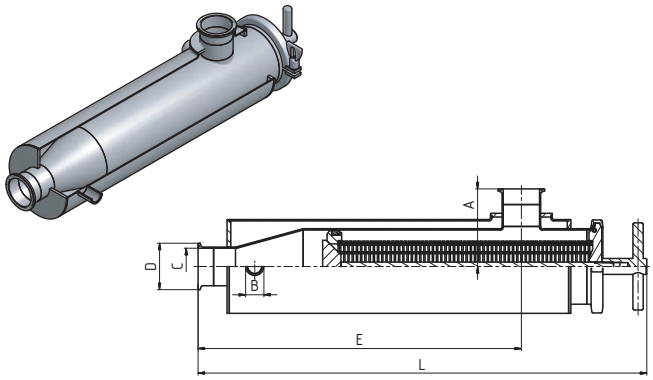

Dimensions

DN	A	B muff	C	D	E	L
25	84,5	3/8"	26	29	431,5	579
32	84,5	3/8"	32	35	421	569,5
40	84,5	1/2"	38	41	408,5	557
50	106,5	1/2"	50	53	444,5	517
65	113	1/2"	66	70	419	591,5
80	158	3/4"	81	85	592	798
100	158	3/4"	100	104	553	759

FILTER

DIN

53500-H Corner filter S - S

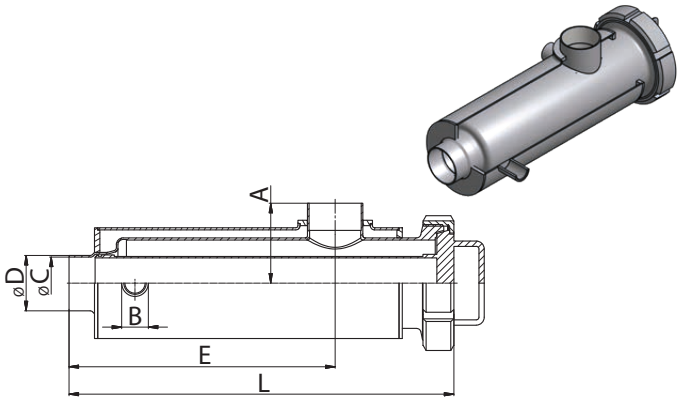

Dimensions

DN	A	B muff	C	D	E	L
25	55	3/8"	26	29	222	318
32	65	3/8"	32	35	227	332
40	75	1/2"	38	41	245	356
50	75	1/2"	50	53	250	356
65	85	1/2"	66	70	265	383
80	100	3/4"	81	85	335	542
100	115	3/4"	100	104	345	571

53510-H Corner filter G - G

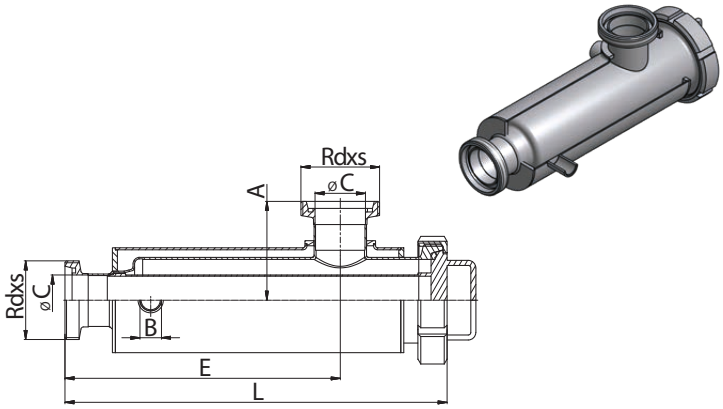

Dimensions

DN	A	B muff	C	Rdxs	E	L
25	77	3/8"	26	52x1/6"	244	340
32	87	3/8"	32	58x1/6"	249	354
40	97	1/2"	38	65x1/6"	267	378
50	98	1/2"	50	78x1/6"	273	379
65	110	1/2"	66	95x1/6"	290	408
80	125	3/4"	81	110x1/4"	360	567
100	145	3/4"	100	130x1/4"	375	601

53530-H Corner filter KM - KM

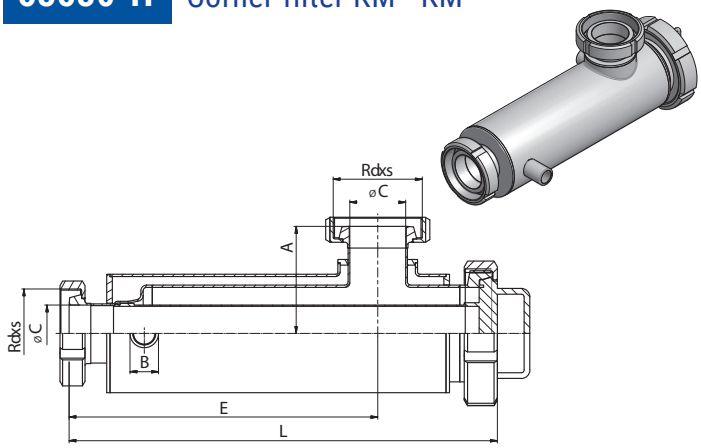

Dimensions

DN	A	B muff	C	Rdxs	E	L
25	70	3/8"	26	52x1/6"	240	336
32	80	3/8"	32	58x1/6"	245	350
40	90	1/2"	38	65x1/6"	263	374
50	91	1/2"	50	78x1/6"	269	375
65	102	1/2"	66	95x1/6"	286	404
80	117	3/4"	81	110x1/4"	356	563
100	135	3/4"	100	130x1/4"	370	596

53540-H Corner filter C - C

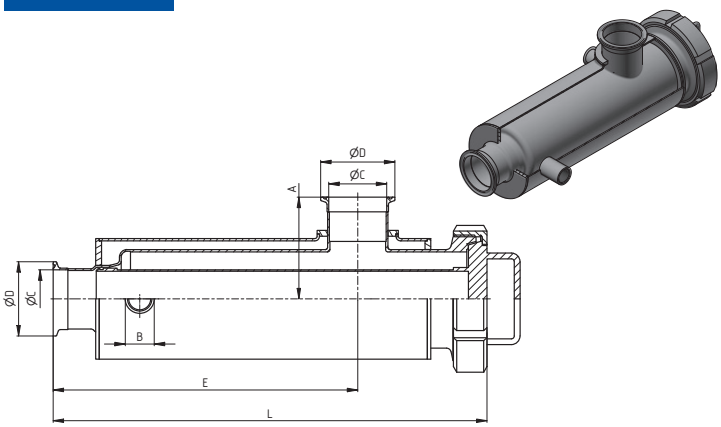

Dimensions

DN	A	B muff	C	D	E	L
25	55	3/8"	26	50,5	234,7	330,7
32	65	3/8"	32	50,5	239,7	344,7
40	75	1/2"	38	50,5	257,7	368,7
50	75	1/2"	50	64	262,7	368,7
65	85	1/2"	66	71	277,7	395,7
80	100	3/4"	81	106	347,7	554,7
100	115	3/4"	100	119	360,8	586,8

BEND

TEE

SMS

34010 Bend S - S

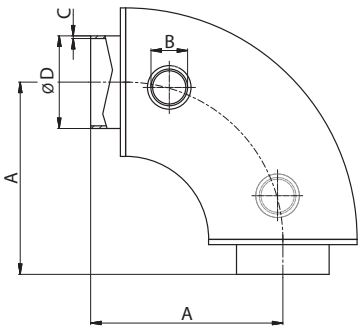

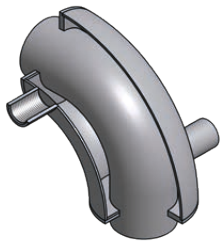

Dimensions

DN	A	B muff	C	D
38	90	1/2"		38,1
51	100	1/2"		50,8
63,5	115	1/2"		63,5
76	130	3/4"		76,2
101,6	150	3/4"		101,6

34410 Tee long S - S - S

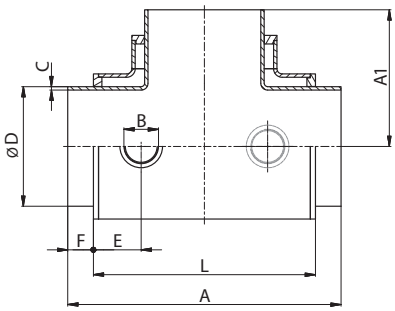

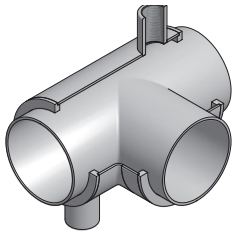

Dimensions

DN	A	A1	B muff	C	D	L
25	110	55	3/8"	1,25	25	74
35	140	70	3/8"	1,25	38	104
51	164	82	1/2"	1,25	51	128
63,5	210	105	1/2"	1,5	63,5	174
76	220	110	3/4"	1,6	76,1	186
101,6	300	150	3/4"	2	101,6	264

34090 Bend C - C

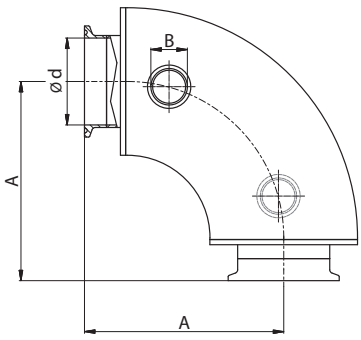

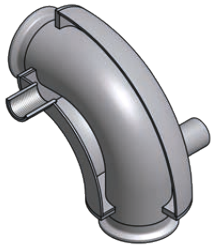

Dimensions

DN	A	B muff	C	D
38	102,7	1/2"		35,5
51	112,7	1/2"		48,5
63,5	127,7	1/2"		60,5
76	142,7	3/4"		72,9
101,6	165,8	3/4"		97,6

BUTTERFLY VALVE

SMS

4601H Butterfly valve S - S

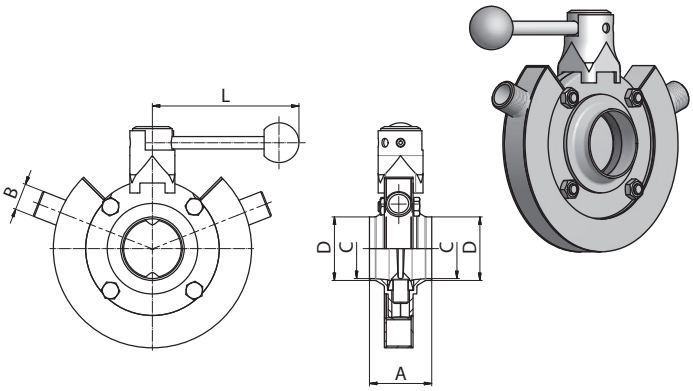

Dimensions

DN	A	B nipple	C	D	L
25	40	3/8"	22	25	102,5
38	42	3/8"	35	38	102,5
51	50	1/2"	48	51	147,5
63,5	50	1/2"	60,5	63,5	147,5
76,1	60	3/4"	72,1	76,1	180
101,6	64	3/4"	97,6	101,6	180
100	64	3/4"	100	106	180

4603H Butterfly valve G - G

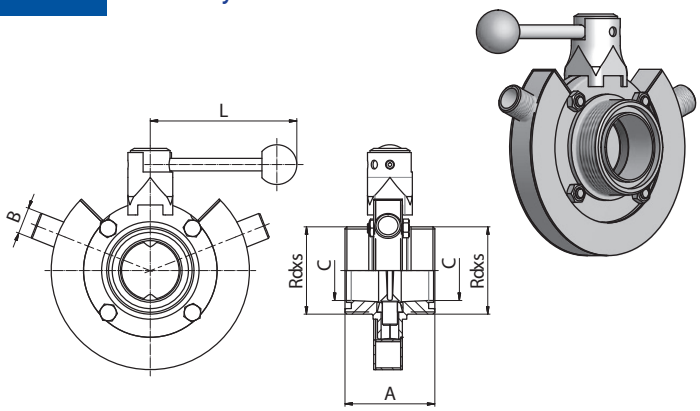

Dimensions

DN	A	B nipple	C	Rdxs	L
25	64	3/8"	22	40x1/6"	102,5
38	72	3/8"	35	60x1/6"	102,5
51	72	1/2"	48	70x1/6"	147,5
63,5	76	1/2"	60,5	85x1/6"	147,5
76,1	100	3/4"	72,1	98x1/6"	180
101,6	104	3/4"	97,6	125x1/4"	180

4604H Butterfly valve G - G

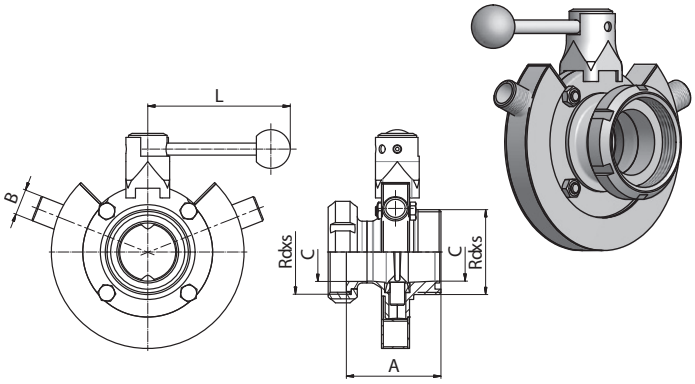

Dimensions

DN	A	B nipple	C	Rdxs	L
25	64	3/8"	22	40x1/6"	102,5
38	72	3/8"	35	60x1/6"	102,5
51	72	1/2"	48	70x1/6"	147,5
63,5	76	1/2"	60,5	85x1/6"	147,5
76,1	100	3/4"	72,1	98x1/6"	180
101,6	104	3/4"	97,6	125x1/4"	180

Type of conection

4601 H - A

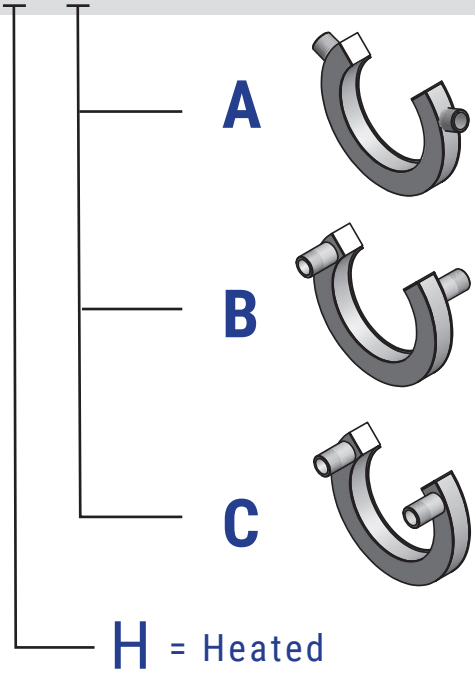

NON RETURN VALVE

SMS

5060D-H Non return valve S - S

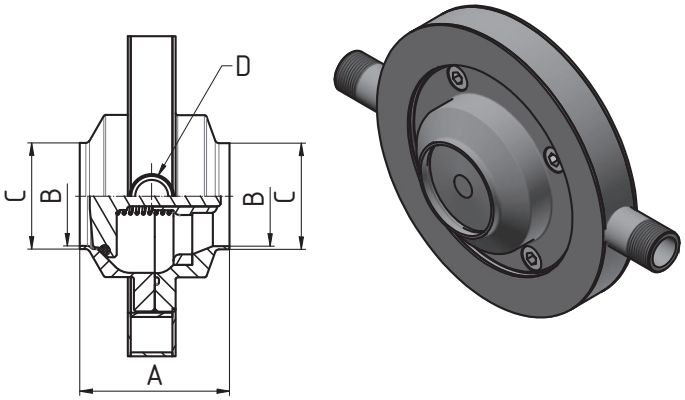

Dimensions

DN	A	B	C	D nipple
25	64	25	22,5	3/8"
38	72	38	35,5	1/2"
51	72	51	48	1/2"
63,5	76	63,5	60,5	1/2"

5064D-H Non return valve G - KM

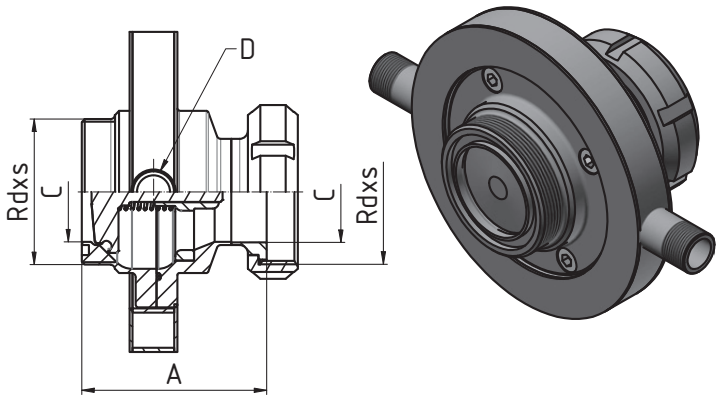

Dimensions

DN	A	C	D nipple	Rdxs
25	64	22,5	3/8"	40x1/6
38	72	35,5	1/2"	60x1/6
51	72	48	1/2"	70x1/6
63,5	76	60,5	1/2"	85x1/6

5063D-H Non return valve G - G

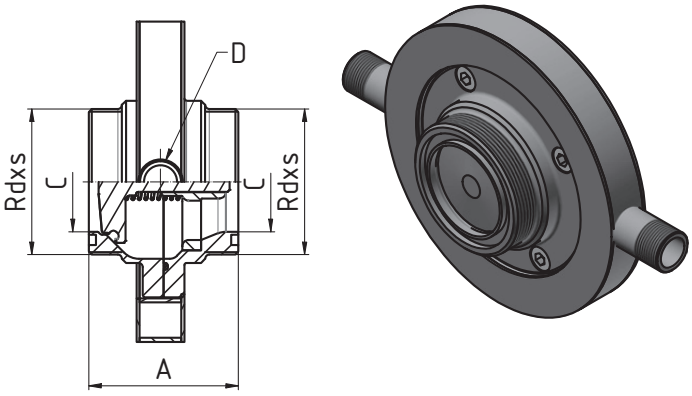

Dimensions

DN	A	C	D nipple	Rdxs
25	64	22,5	3/8"	40x1/6
38	72	35,5	1/2"	60x1/6
51	72	48	1/2"	70x1/6
63,5	76	60,5	1/2"	85x1/6

5069D-H Non return valve C - C

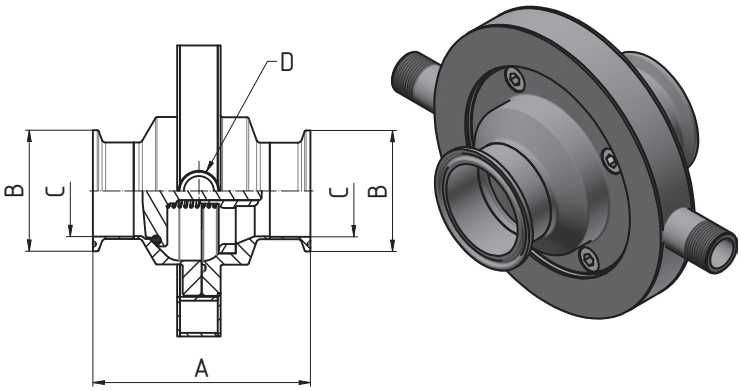

Dimensions

DN	A	B	C	D nipple
25	64	50,5	22,5	3/8"
38	72	50,5	35,5	1/2"
51	72	64	48	1/2"
63,5	76	77,5	60,5	1/2"

DIRECT FILTERS, DOUBLE SHELL

SMS

53441-H Dirt trap direct S - S

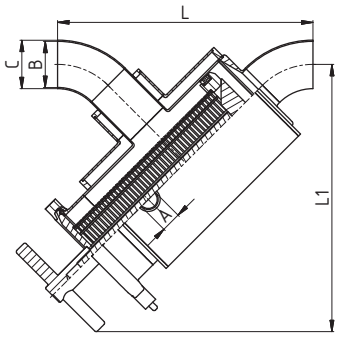

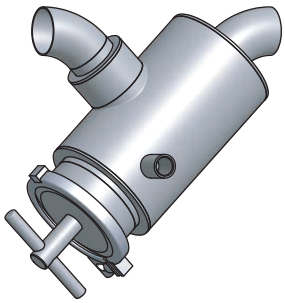

Dimensions

DN	A muff	B	C	L	L1
25	3/8"	22,5	25		
38	1/2"	35,5	38,1		
51	1/2"	48,5	51	268,7	281,1
63	1/2"	60,5	63,5		
76	3/4"	72,9	76,1		
101	3/4"	97,6	101,6		

53442-H Dirt trap direct G - G

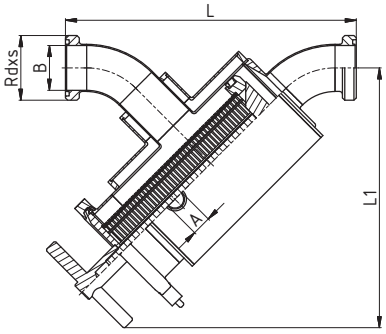

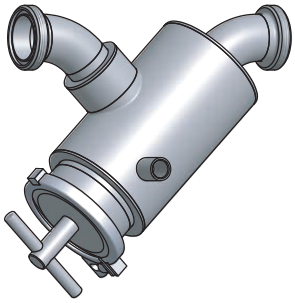

Dimensions

DN	A muff	B	L	L1	Rdxs
25	3/8"	22,5			40x1/6"
38	1/2"	35,5			60x1/6"
51	1/2"	48,5	315	281,1	70x1/6"
63	1/2"	60,5			85x1/6"
76	3/4"	72,9			98x1/6"
101	3/4"	97,6			125x1/4"

53443-H Dirt trap direct KM - KM

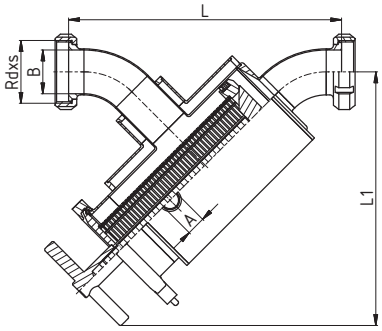

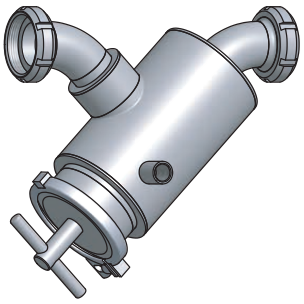

Dimensions

DN	A muff	B	L	L1	Rdxs
25	3/8"	22,5			40x1/6"
38	1/2"	35,5			60x1/6"
51	1/2"	48,5	302,7	281,1	70x1/6"
63	1/2"	60,5			85x1/6"
76	3/4"	72,9			98x1/6"
101	3/4"	97,6			125x1/4"

53445-H Dirt trap direct C - C

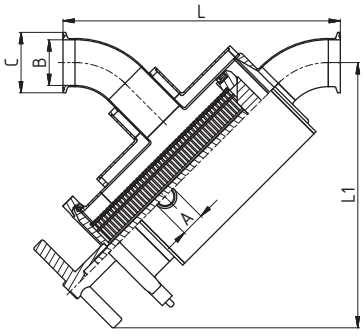

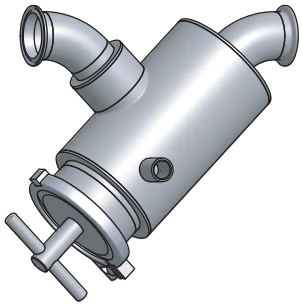

Dimensions

DN	A muff	B	C	L	L1
25	3/8"	22,5	50,5		
38	1/2"	35,5	50,5		
51	1/2"	48,5	64	294,1	281,1
63	1/2"	60,5	77,5		
76	3/4"	72,9	91		
101	3/4"	97,6	119		

FILTER

SMS

53461-H Tubular filter S - S

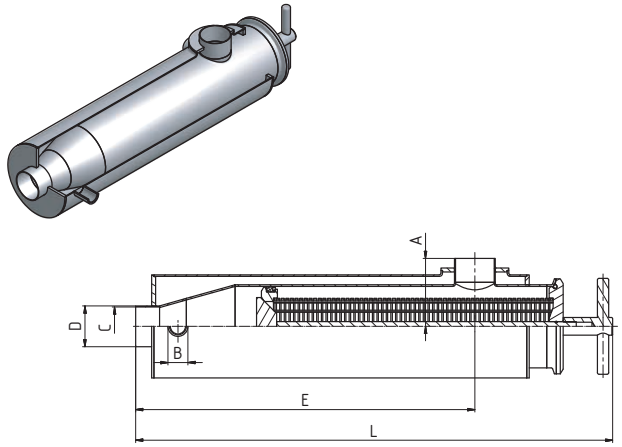

Dimensions

DN	A	B muff	C	D	E	L
51	85	1/2"	48,5	51	424,5	596,9

53462-H Tubular filter G - G

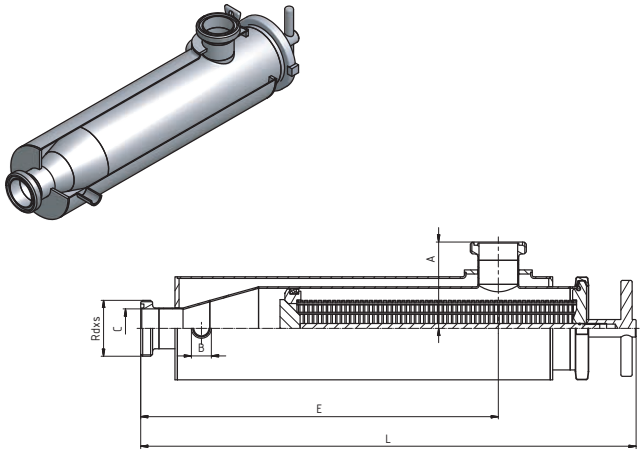

Dimensions

DN	A	B muff	C	Rdxs	E	L
51	108	1/2"	48,5	70x1/6"	447,5	619,3

53463-H Tubular filter KM - KM

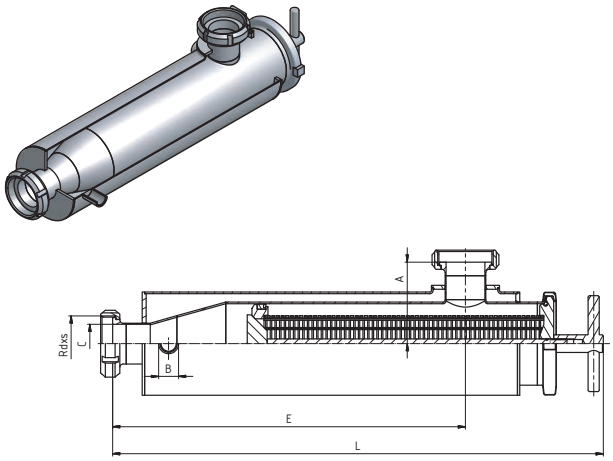

Dimensions

DN	A	B muff	C	Rdxs	E	L
51	102	1/2"	48,5	70x1/6"	441,5	613,3

CONVERSION TABLE	UMRECHNUNGSTABELLE	
DN	(inch)	(mm)
8	**1/4"**	**6,35**
10	**3/8"**	**9,25**
15	**1/2"**	**12,7**
20	**3/4"**	**19,0**
25	**1"**	**25,4**
32	**1 1/4"**	**31,7**
40	**1 1/2"**	**38,1**
50	**2"**	**51,0**
65	**2 1/2"**	**63,5**
80	**3"**	**76,1**
100	**4"**	**104,0**

BAR CONVERSION CHARTS	BAR UMPRECHNUNGSTABELLE
1 Bar	100000 Pascals
	100 Kilopascals
	1000 Milibars
	1000000 Microbars
	~0,98 Atmospheres
	~401,46 Inches of wather
	10 Meters of wather
	~29,53 Inches of mercury
	~750 Milimeters of mercury
	~14,5 Pounds per square inches
	~1,02 Kilograms per square inches

MATERIALS USED

All units and parts listed in this catalogue are produced from non-corrosive acid-resistant Cr – Ni steel ČSN 17 240, which is the equivalent of the German standard DIN 1.4301. If the corrosion-proof requirements of the parts are higher they are produced from non-corrosive Cr-Ni-Mo steel ČSN 17 349 which conforms to DIN 1.4404.

Chemical composition of the most frequently used non-corrosive steels

ČSN PN	%C max.	%Si max.	%Mn max.	%P max.	%S max.	%Cr max.	%Mo max.	%Ni max.	%Ti max.
17 240	0.07	1.00	2.00	0.045	0.030	17.0-20.0	-	9.0 -11.5	-
17 249	0.03	1.00	2.00	0.045	0.030	17.0-20.0	-	10.0-12.5	-
17 346	0.07	1.00	2.00	0.045	0.030	16.5-18.5	2.0-2.5	10.5-13.5	-
17349	0.03	1.00	2.00	0.045	0.030	16.5-18.5	2.0-2.5	11.0-14.0	-
17 248	0.10	1.00	2.00	0.045	0.030	17.0-19.0	-	9.5-12.0	>=5xC
17 348	0.10	1.00	2.00	0.045	0.030	16.5-18.5	2.0-2.5	11.0-14.0	>=5xC

International standards conversion table for marking steels

Poldi	Czech Rep. PN	Germany DIN (W. Nr.)	USA ASTM	Italy UNI	France AFNOR	Russia GOST
AKV7	17240	1.4301	AISI 304	X5CrNi1810	Z7CN18-09	08Ch18N10
AKV2	17249	1.4306	AISI304L	X2CrNi1811	Z3CN19-121	03Ch18N11
AKV EX7	17346	1.4401	AISI 316	X5CrNiMo1712.2	Z7CND17-12-02	-
AKV EX2	17349	1.4404	AISI 316L	X2CrNiMo1713.2	Z3CND18-12-02	03Ch12N14M2
AKVS7	17248	1.4541	AISI 321	X6CrNiTi1811	Z6CNT18-10	08Ch18N10T
AKV EX S9	17348	1.4571	AISI 316Ti	X6CrNiMoTi1712	Z6CNDT17-12	08Ch17N13M2

DESIGN

The bulk of products are produced from bars or forged material. The material is in such a state that after welding it is not necessary to carry out further treatment. Tubular adapting pipes in their basic finish are pickled – matt, or treated – ground (brushed).

PIPE CONNECTING PARTS – DIN SCREW COUPLINGS

These are produced according to the DIN 11 851 standard and the screw thread according to the DIN 405 (ČSN 01 4037) standard. Connection of the sockets (screw thread or ring) to the tubes can be done in two ways:

a) butt welding
b) flaring the inside diameter

From diameters of 50 mm and above it is necessary to ensure flaring of connections with a seam weld. Flared connections with a seam weld are hygienically unobjectionable and are suitable for pressures of 1 MPa (tested at a pressure of 2 MPa). Parts which do not correspond to any standards are produced according to branch or factory standards, and possibly workshop standards, and in some cases to approved technical drawings.

SEALING

Seals listed in this catalogue are produced from the following materials – SILICON, PERBUNAN, EPDM or VITON. They are supplied separately or as part of the set. Prices for tubular adapting pipes and sets of screw couplings do not include sealing rings.

MAINTENANCE

Without exception the materials used are suitable for general use in the food-processing industry. These materials are sensitive to high concentrations of chloride solutions and therefore we recommend that the instructions and recom-mendations of the manufacturer are heeded. Corrosion can only be prevented if these instructions are adhered to.

SPECIAL DESIGN

Apart from the standard parts listed in this catalogue we also supply special designs according to customer requirements and their technical documentation.

INSTRUCTIONS FOR ORDERING

For quick and simple processing of your order please supply the following data:

1	2	3	4
numerical labelling of goods	dimension(DN)	material	amount

If group „3" is not listed in the order we automatically supply material 17 240 (DIN 1.4301)

If you require other parts and units than those in this catalogue please send your specific requirements.

This issue nullifies all previous catalogues and delivery conditions listed in them.

We would be pleased to discuss your specific requirements and answer your questions in person. We look forward to your visit.

Technical Information for Gaskets					
Title	**Silicon** (VMQ silicon rubber)	**EPDM** (ethylene-propylene-diene rubber)	**Viton** (FPM fluorine rubber)	**Perbunan** (NBR nitrile rubber)	**PTFE** (polytetrafluorethylene)
Temperature of use	It is stable in water up to 100 °C Possibility of sterilisation by steam short-term up to 120 °C to 130 °C	Permanent operating use from -40 °C to +140 °C Possibility of sterilisation by steam up to 130 °C	Permanent operating use from -20 °C to +200 °C Possibility of sterilisation by steam short-term up to 130 °C to 140 °C	Permanent operating use from -25 °C to +110 °C Possibility of sterilisation by steam short-term up to 130 °C	Up to +200 °C it is physiologically harmless, use from -200 °C to +260 °C
Recommended use	High temperature load capacity It has good resistance to cold, suitable for food, it has dielectric properties. It has good resistance to alcohols.	It has good resistance to swelling for: • Diluted inorganic and organic acids, media, oxidising media, lyes, and ketones • Hot water and steam up to 130 °C	It has good resistance to swelling for: • Mineral oils • Plant and animal oils • Lubricants (also some additives) • Fuels	It has good resistance to swelling for: • Aliphatic hydrocarbons (such as propane, butane, benzine, mineral oil) • Lubricants based on mineral oil	It has good resistance to swelling in almost all parts It has a smooth and repellent surface so sticking does not occur It has better chemical resistance than in all other elastomers Non-flammable material
Limited use (border)	Shows high swelling for: • Low-molecular esters and ethers • Aliphatic and aromatic hydrocarbons • Concentrated acids and alkali	Cannot be used for: • Plant and animal oils • Aliphatic, aromatic, and chlorinated hydrocarbons • Mineral oils	Shows high swelling for: • Polar solvents, such as acetone, methyl ketone, ethyl acetate, diethyl ether, and dioxane • Low-molecular organic acids (formic acid and acetic acid) • Gaseous ammonia, amines and alkanes • Overheated water steam	Not resistant to: • Polar solvents • Chlorinated hydrocarbons • Ketones • Aromatic hydrocarbons (benzol) • Esters	Not resistant to: • Liquid alkaline metals and some compounds of fluorine in connection with higher pressure and temperature The material does not show the flexibility of rubber.
Material approval	BGA/FDA	BGA/FDA	BGA/FDA	BGA/FDA	BGA/FDA

BGA = approval of the "Federal Health Authority" in Germany ("Bundesgesundheitsamt")
FDA = approval of the "US Food and Drug Administration"

Technische Informationen für Dichtringe					
Name	**Silikon** (VMQ)	**EPDM** (Ethylen-Propylen-Dien-Kautschuk)	**Viton** (FPM)	**Perbunan** (NBR)	**PTFE** (Polytetrafloutäthylen)
Einsatztemperatur	in Wasser bis 100 °C beständig Dampfsterilisierbar kurzfristig bis 120 °C - 130 °C	Dauereinsatz von minus 40 °C bis 140 °C Dampfsterilisierbar bis 130 °C	Dauereinsatz von minus 20 °C bis 200 °C Dampfsterilisierbar kurzfristig bis 130 °C - 140 °C	Dauereinsatz von minus 25 °C bis 110 °C Dampfsterilisierbar kurzfristig bis 130 °C	bis 200 °C physiologisch unbedenklich, Einsatz von -200 °C bis +260 °C
typ. Einsatzbereich	hohe thermische Belastbarkeit gute Kältebeständigkeit, für lebensmittel gut geeignet, dielektrische Eigensohaften gute Beständigkeit gegenüber Alkoholen	gute Quellbeständigkeit bei: • verdünnte anorg.- und organische Säuren, Medien, oxidierend wirkende Medien, Laugen und Kentonen • in Heißwasser und Dampf bis 130 °C	gute Quellbeständigkeit bei: • Mineralölen • pflanzlichen und tierischen Olen • Fetten (auch bestimmte Additive) • Kraftstoffe	gute Quellbeständigkeit • aliphatisohen Kohlenwasserstoffen (wie Propan, Butan, Benzin, Mineralölen) • Fett auf Mineralolbasis	gute Quellbeständigkeit in nahezu allen Teilen Oberfläche glatt und abweisend, dadurch kein Haften von Růckständen chemische Beständigkeit besser als bei allen anderen Elastomeren kaum brennbar
Einsatzgrenzen	hohe Quellung bei: • niedermolekularen Estem und Ethern • aliphatischen und aromatischen Kohlenwasserstoffen • konz. Säuren und Akalien	nicht einzusetzen bei: • pflanzlichen und tierischen Olen • aliphatischen aromatischen und chlorierten kohlenwasserstoffen • Mineralöle	stark quellend bei: • polaren Lösungsmitteln wie Aceton, Methylketon, Ethylacetat, Diethylether u. Dioxane • niedermolekularen organ. Säuren (Ameisen - und Essigsäuren) • Ammoniakgase, Amine u. Alkanien • überhitzter Wasserdampf	nicht beständig bei: • polaren Lösungsmitteln • chlorierten Kohlenwasserstoffen • Ketone • Aromaten (Benzol) • Ester	nicht beständig bei: • flůssigen Alkalimetallen und einigen Flourverbindungen in Verbindung mit hohem Druck und Temperatur kein gummielastischer Werkstoff
Werkstoffzulassung	BGA/FDA	BGA/FDA	BGA/FDA	BGA/FDA	BGA/FDA

BGA = Bundesgesundheitsamt
FDA = US Food and Drug Administration

NIOB FLUID

PRODUCER OF STAINLESS PIPING SYSTEMS

NIOB FLUID s. r. o.
Ostrožská 1003
687 25 Hluk
Czech Republic

Phone: +420 572 419 822 – 8
Fax: +420 572 419 868
E-mail: marketing@niobfluid.cz

www.niobfluid.cz